Kitchen Work Center • Classic Picture Frames • Serving Tray • Stacking Collector Cases

Woodsmith®

Vol. 22 / No. 129

Projects Inside:

- Build This Rock-Solid Kitchen Work Center
- 3 Classic Picture Frames You Can Make
- Stack 'Em Up — Easy-to-Build Collector Cases
- Learn How to Use Your Table Saw to Make Cove Molding

Kitchen Work Center

www.woodsmith.com

Woodsmith

No. 129 June, 2000

Publisher Donald B. Peschke
Editor Terry J. Strohman
Associate Editors Jon Garbison, Vincent Ancona
Art Director Todd Lambirth
Senior Illustrators David Kreyling, Dirk Ver Steeg

CREATIVE RESOURCES
Creative Director: Ted Kralicek • *Project Developer:* Ken Munkel • *Sr. Project Designers:* Kent Welsh, Kevin C. Boyle • *Shop Manager:* Steve Curtis • *Shop Craftsman:* Steve Johnson • *Senior Photographer:* Crayola England

SPECIAL PUBLICATIONS
Executive Editor: Douglas L. Hicks • *Senior Graphic Designer:* Chris Glowacki • *Assistant Editors:* Joseph E. Irwin, Craig Ruegsegger, Joel A. Hess • *Graphic Designers:* Vu Nguyen, April Walker Janning, Stacey L. Krull • *Graphic Intern:* Katie VanDalsem

CIRCULATION
Subscriber Services Director: Sandy Baum • *New Business Director:* Glenda K. Battles • *New Business Mgr.:* Todd Bierle • *Promotion Mgr.:* Rick Junkins • *Renewal Mgr.:* Paige Rogers • *Billing Mgr.:* Rebecca Cunningham • *Circ. Marketing Analyst:* Kris Schlemmer • *Asst. Subs. Mgr.:* Joy Krause • *Creative Mgr.:* Melinda Jo Haffner • *Sr. Graphic Designer:* Mark Hayes, Robin Dowdell • *Graphic Intern:* Jennie Comstock

CORPORATE SERVICES
Controller: Robin Hutchinson • *Sr. Account.:* Laura Thomas • *Accts. Payable:* Mary J. Schultz • *Accts. Receivable:* Margo Petrus • *Production Dir.:* George Chmielarz • *Electronic Publishing Director:* Douglas M. Lidster • *Network Administrator:* Cris Schwanebeck • *Pre-press Image Specs.:* Troy A. Clark, Minniette Johnson • *New Media Manager:* Gordon C. Gaippe • *Web Site Art Director:* Gene Pedersen • *Technology Analyst:* Carol Schoeppler • *Web Content Managers:* Terry Walker, David Briggs • *Web Prod. Specialist:* Adam Best • *H.R. Assistant:* Kirsten Koele • *Facilities Mgr.:* Julia Fish • *Admin. Assistant:* Sherri Ribbey • *Receptionist:* Jeanne Johnson • *Mail Room/Delivery:* Lou Webber

WOODSMITH MAIL ORDER
Operations Dir.: Bob Baker • *Customer Service Mgr.:* Jennie Enos • *Warehouse Supr.:* Nancy Johnson • *Buyer:* Linda Jones • *Tech. Service Rep:* Johnny Audette • *Admin. Assist.:* Nancy Downey • *Cust. Serv. Reps.:* Tammy Truckenbrod, Anna Cox, Deborah Rich, April Revell • *Warehouse:* Sylvia Carey, Dan Spidle, Sheryl Knox

WOODSMITH STORE
Manager: Dave Larson • *Sales Staff:* Wendell Stone, Jim Barnett, Kathy Smith, Larry Morrison, Harold Cashman, Tim Rundell, Tim Thelen • *Office Mgr:* Vicki Edwards

Woodsmith® (ISSN 0164-4114) is published bimonthly (Feb., Apr., June, Aug., Oct., Dec.) by August Home Publishing Company, 2200 Grand, Des Moines, IA 50312.
Woodsmith® is a registered trademark of August Home Publishing.

Copyright© 2000 August Home Publishing Company. All rights reserved.

Subscriptions: Single copy: $4.95. One year subscription (6 issues), $21.94. (Canada/International add $10 per year, U.S. funds.)
Periodicals Postage Paid at Des Moines, IA and at additional offices. USPS/Perry-Judd's Heartland Division Automatable Poly.
Postmaster: Send change of address to *Woodsmith*, Box 37112, Boone, IA 50037-2112.
Subscription Questions? Write to *Woodsmith*, P.O. Box 842, Des Moines IA 50304-9961 or call 1-800-333-5075, 8:00 am to 5:00 pm, Central Time, weekdays. Or send an e-mail to: orders@woodsmith.com
E-Mail: woodsmith@woodsmith.com
World Wide Web: http://www.woodsmith.com

Printed in U.S.A.

EDITOR'S COLUMN

SAWDUST

I've always admired large, molded wood frames. This is the type of frame where the moldings are scooped out to a graceful curved profile. The only problem is this type of frame tends to be very expensive. (A large frame can cost several hundred dollars.) So I decided to try my hand at making my own molded frame.

Now typically this type of molding is made using a large shaper with special cutters. So the challenge for me as a woodworker was how to create the gently curving profile without using any special tools.

That's when I started thinking about a simple technique I've used a few times in the past — cutting coves on a table saw. This involves pushing the workpiece across the saw blade at an angle.

When I mentioned this technique to the project designers, we all agreed it sounded like a good idea. But there was only one way to know for sure — go to the shop and try it out.

We started by clamping a couple of plywood fences at an angle to the saw blade. After making a series of *light* passes, the cove looked just about right. Then we started a process I really enjoy. It's called "what if." It goes something like this: You make a cut and then ask what if the angle of the fence was changed. Or what if we tilted the blade? Or what if we changed the fence angle *and* tilted the blade?

Before we knew it, we didn't have just one frame. We had three great looking frames. We also came up with a design for a serving tray that uses the same basic technique for cutting coves.

If you've never cut coves on a table saw before I think you'll find watching the curved profiles take shape an interesting process. To ensure good results, we've included a step-by-step article beginning on page 28 that lets you in on all the tricks.

HELP WANTED

One final note. We're looking for someone who is enthusiastic about woodworking and home improvement to join our project design team here at August Home Publishing. This would include designing projects for *Woodsmith* and two of our companion publications, *ShopNotes* and *Workbench*. If you're interested in this position, send a cover letter and resume highlighting your experience to: Ted Kralicek, 2200 Grand Ave., Des Moines, IA 50312.

Terry

NEW On the Web

Woodsmith Readers' Gallery

Visit other *Woodsmith* subscribers' workshops, and see photos of the projects they've built. It's all online in the new Readers' Gallery on the *Woodsmith* web site:
www.woodsmith.com

We want you to be part of the Readers' Gallery! To submit photos of your favorite *Woodsmith* projects or views of your shop, follow the instructions you'll find at the gallery.

A LOOK INSIDE

CONTENTS

Features

Kitchen Work Center 6

With its solid maple construction and strong mortise and tenon joinery, this work center can stand up to any kitchen task. Plus, a large drawer and a pair of slatted shelves offer convenient storage.

Pastry Board 15

Here's a project you can build in an evening out of scrap wood. It conveniently hooks over a countertop or work center and makes an ideal place for rolling out pastry dough.

Classic Picture Frames 18

One look at these gorgeous frames, and you'll think they came from a custom frame shop. But all three profiles are created with nothing more than a table saw and a router. We'll show you how it's done and give you some tips on framing your picture as well.

Serving Tray 26

Despite the elegant look, the molded sides of this tray can easily be made in your shop. And don't worry about assembling the tray. You'll learn how to get perfect results when it comes to cutting the compound miters and gluing up all the pieces.

Cutting Coves on a Table Saw 28

At first glance, it seems hard to believe that you could cut a sweeping cove on a table saw. After all, a table saw is for straight cuts. But you'll discover the secret and get all the information you need to make professional-looking cove moldings.

Stacking Collector Cases 30

The drawers and open shelves on these cases are great for storing and displaying your favorite keepsakes. But the really interesting feature is the way the cases stack together like building blocks.

Departments

Tips & Techniques 4
Shop Notes 16
Sources 35

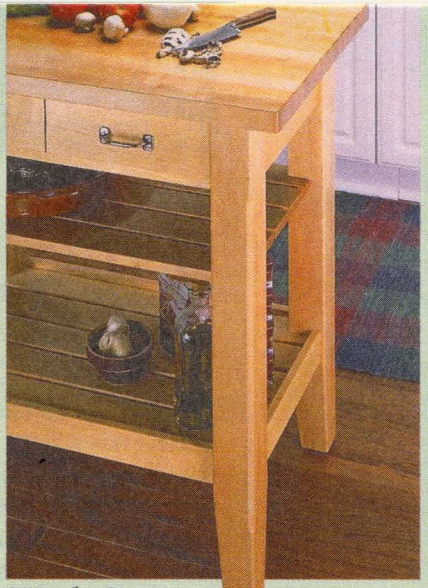

Work Center page 6

Picture Frames page 18

Serving Tray page 26

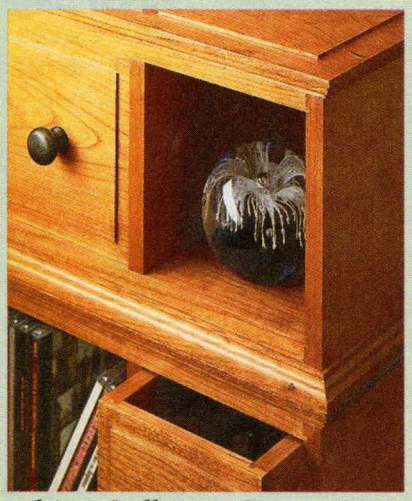

Stacking Collector Cases page 30

TIPS & TECHNIQUES

FREE
Online Tips

If you'd like even more woodworking tips, the solution is simple. Just visit us at our website and sign up to receive a free tip via email every week.

www.woodsmith.com

Corner Cabinet Kickstand

When I was making a corner cabinet a few months ago, I discovered that the most difficult part of the project wasn't cutting the miters or even clamping the cabinet together. It was supporting the cabinet on my workbench while working on the face frame.

I suppose I could have built a special cradle to hold the cabinet, but I didn't have anything on hand to make one. So instead, I put my mind to work to come up with another method.

The solution I arrived at couldn't be simpler. I just attached a couple of clamps to each end of the cabinet, like in the drawing.

Each clamps works like a kickstand on a bicycle, holding the cabinet upright and preventing it from tipping over while I attach the face frame.

Ron Burgen
Eskridge, Kansas

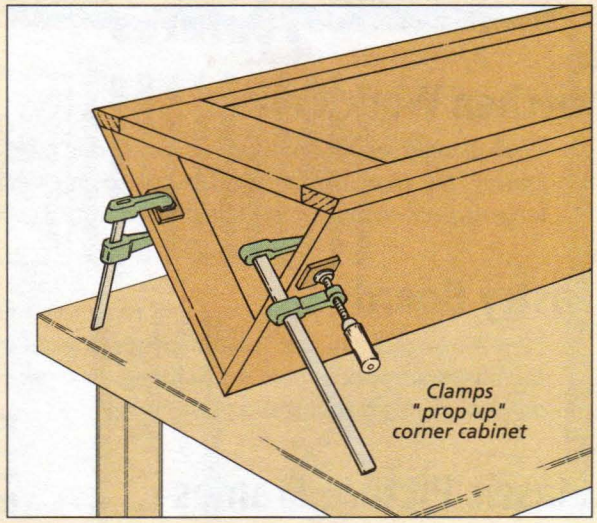

Wire Nut Cap

I was always losing the cap to my glue bottle. But recently, I discovered a good replacement. I simply use a plastic wire nut, like in the photo at left.

This not only works for glue bottles, but it's an excellent way to cap off partially used tubes of caulk or silicone to prevent them from drying out.

Mike Drewery
St. Hilaire, Quebec

▲ *Plastic wire nuts make convenient caps for glue bottles or tubes of caulk.*

Router Bushing Thread Lock

When I'm routing dovetails or following a template, I use a guide bushing on the base plate of my router, like the one shown in the drawing below. But sometimes I have a problem with the threads of the bushing working loose due to the vibration of the router.

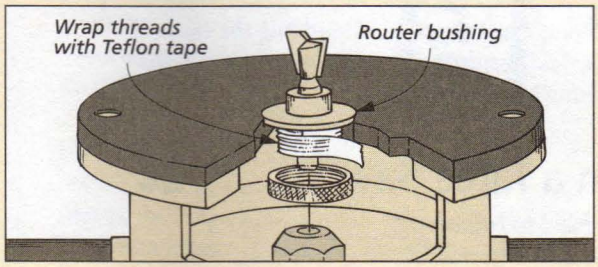

To solve this problem, I use a simple fix. Before installing the bushing on my router base, I wrap the male threads of the bushing with *Teflon* tape (the kind used with threaded pipe connections). The tape prevents the threads from vibrating loose. (*Teflon* tape can be found at most hardware stores.)

Kevin Roberts
Katy, Texas

Dust Bag Hold-Up

Reattaching the bag on my dust collector is a job that takes three hands. You have to hold the bag around the flange of the collector while attaching the metal strap that holds it in place.

To make the job easier, I simply fished a piece of elastic waistband through the hem of the dust bag using a safety pin, like in Fig. 1. (Elastic waistband can be purchased at most fabric supply stores.)

After gathering the hem of the bag around the elastic, I tied the ends of the waistband together, as in Fig. 2. Fig. 3 shows how well the elastic holds the bag in place.

Morgan Monks
Tempe, Arizona

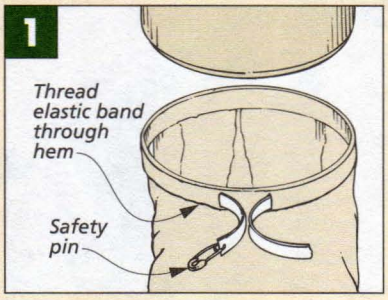

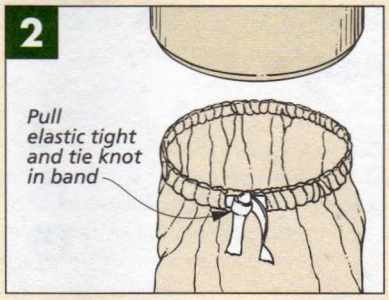

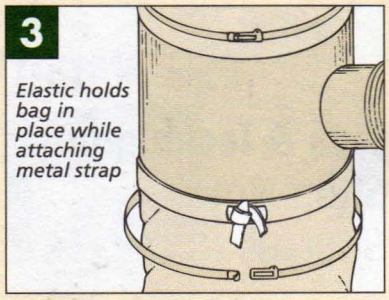

Router Table Indexing Jig

Recently I had to cut a series of evenly spaced dadoes across the sides of a small display shelving unit I was making. I wanted to make the dadoes on my router table, but I needed a way to space them evenly. Since I don't have a miter gauge slot in my router table top, I couldn't use a miter gauge jig to space the dadoes. So I came up with this idea instead.

I started by making a simple auxiliary top for my router table out of a piece of ½" MDF (medium-density fiberboard). The top has a hole in the center for the router bit. A strip of wood is inset into the top to serve as an index pin for spacing the dadoes, like in Fig. 1. This top can be clamped to your router table. Just make sure that the distance between the router bit and the index equals the spacing of your dadoes.

With the auxiliary top securely fastened, butt one of the workpieces against the index pin and push it forward with a backer block to cut the first dado. Now just shift the workpiece so the dado you just cut fits over the index pin and cut your second dado. Repeat this process until all the dadoes have been cut, as in Fig. 2.

Shirley Weismann
Rolling Meadows, Illinois

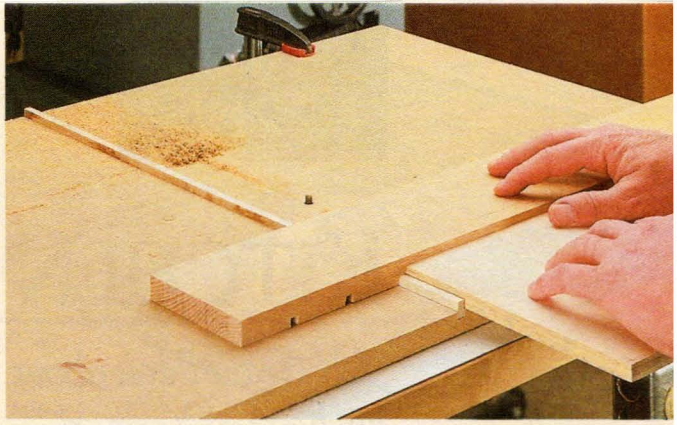

▲ *A simple auxiliary table fitted with an index pin allows you to rout evenly-spaced grooves or dadoes.*

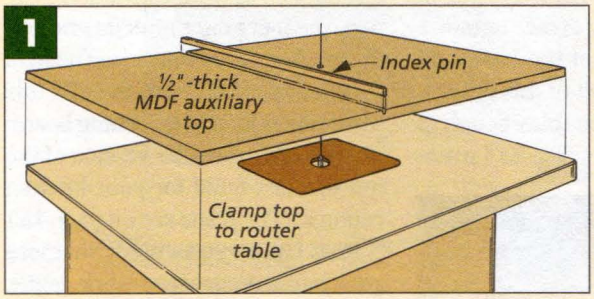

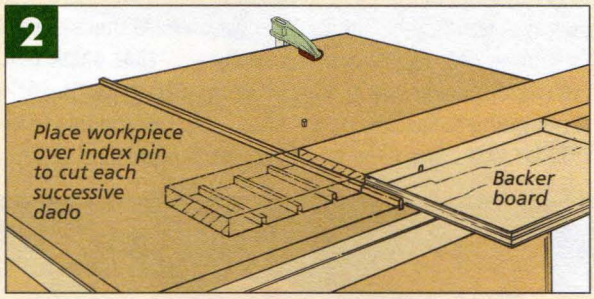

Stop Collar for Lathe Tool Rest

I enjoy turning on the lathe, but one of my least favorite tasks is adjusting the tool rest height whenever I reposition the tool rest.

To make this job easier and quicker, I simply added a "stop collar" to my lathe tool rest. The collar is just a ¼"-wide hose clamp that fits around the post of the tool rest, as you can see in the photo below. When the tool rest is inserted into its base, the clamp contacts the base and automatically positions the tool rest at the perfect height.

Wayne Rivers
Sanborn, New York

SUBMIT YOUR TIPS

If you have an original shop tip, we would like to hear from you and consider publishing your tip in one or more of our publications. Just write down your tip and mail it to: *Woodsmith,* Tips and Techniques, 2200 Grand Avenue, Des Moines, Iowa 50312. Please include your name, address, and daytime phone number in case we have any questions. If you would like, FAX it to us at 515-282-6741 or send us an e-mail message at woodsmith@woodsmith.com. We will pay up to $200 if we publish your tip.

QUICK TIPS

Hand Cleaner

Here's a tip for removing varnish or sticky finishes from your hands. First, pour a small amount of cooking oil in your hands and rub it in briskly. Then add a squirt of liquid soap and a little water and work it in. Finally, rinse your hands in clean water. The oil and soap mixture helps lift the varnish from your hands without drying them out.

Jim Kapusta
Hermitage, Pennsylvania

Quick Set-up Gauge

When setting up a fence on a table saw or router table, a quick way to check the distance between the fence and the blade or bit is to use a drill bit as a gauge.

Henry Ellis
Melbourne, Florida

"Eraser" for Permanent Marker

I use red and black permanent markers in my shop for identifying my tools and marking on surfaces that won't accept ordinary pen or pencil. But sometimes, I'll accidentally get an unwanted mark on my project. Quite by accident, I've discovered that if you spray the errant marking with Lysol® disinfectant spray, it will wipe right off. This also works on furniture, walls, and countertops.

David Fichtner
Sedro Wooley, Washington

Editor's Note: If you're using this tip on a piece of furniture or a wall, it's probably a good idea to test the spray on an inconspicuous area first to make sure it won't damage the finish or paint.

FEATURE PROJECT

KITCHEN WORK CENTER

When you think about it, there's a lot that goes into a recipe for a sturdy kitchen work center — and this one has all the right ingredients.

No question about it — this project has all the ingredients needed to make a great kitchen work center. And whether you're going to be chopping vegetables, rolling out a pie crust, or tenderizing meat, you can really put some muscle into it. This project is not going to budge.

STOUT BASE. There's a good reason why this center is so sturdy. It has four solid legs and traditional joinery. Nothing fancy though. Just thick mortise and tenon joints that create a stout base that's not going to rack or move.

EDGE GRAIN TOP. But the base isn't the only "beefy" part of this project. The top has to be durable enough to withstand sharp utensils. So I made the top a large cutting board, gluing up pieces of hard maple face to face, which is illustrated in the detail at the top of page 7. This technique positions the more durable edge grain on the top — exactly where you need it.

Note: You don't have to build this work center for a large cutting board. There's also a smaller version of the top you can build for your kitchen counter. (The plans are on page 15.)

WORK CENTER PROPORTIONS. But more goes into a recipe for a work center than just a strong base and top. The proportions also have to be right. They're not going to be the same as they would be for a dining table or a desk. Instead, this center is designed so you can work comfortably while standing. In fact, it's the same height as most kitchen counters.

However, don't think you'll need an industrial-sized kitchen for this project. It takes up less than six square feet of floor space. And if you'd like to move it out of the way often, there's an optional leg design on page 9 that features heavy-duty locking casters.

STORAGE. In addition to the right proportions, I also wanted to cook up some extra storage space, so I added a drawer and two shelves.

When first designing the center, I liked the look of two small drawers, but to be honest, they wouldn't have held much. Instead, there's a wide drawer that *looks* like two small ones, as shown in the photo at right. Plus, one drawer is much easier to build and support than two narrow ones.

Finally, I added a couple of shelves — a fixed shelf and an adjustable shelf. And for you wine enthusiasts, there's even an optional wine rack that can be added to the adjustable shelf, as shown on page 14.

Construction Details

OVERALL DIMENSIONS:
36"H x 36"W x 22"D

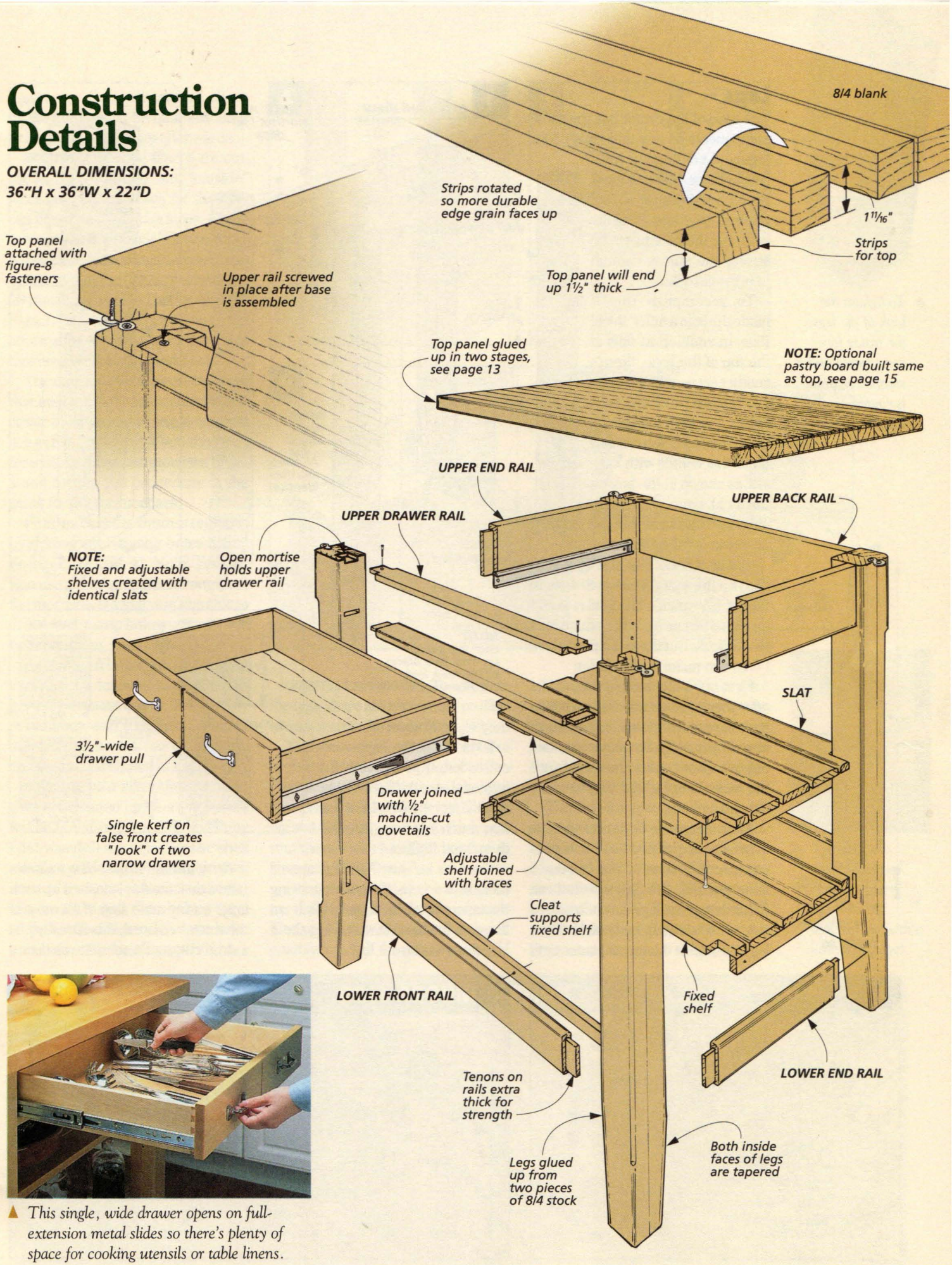

▲ *This single, wide drawer opens on full-extension metal slides so there's plenty of space for cooking utensils or table linens.*

▲ *To lighten the look of the legs, the inside faces are tapered and a stopped chamfer is routed on the outside corner.*

Legs

The base of the center has the same components as any table base: four legs and connecting rails. But because this is a *work* center and because it's tall enough to stand at while working, the base has to be strong and sturdy enough to prevent rocking.

To accomplish this, I made the legs a full 3" thick. Plus, in addition to rails at the top of the base, there's another set near the bottom. (You can see their mortises in Fig. 1 or turn to page 7.)

Design Note: You can also build this center with casters, as shown in the box on the next page. The techniques are the same, but the dimensions will be different.

GLUE UP BLANKS. The first step is to glue up the *legs (A)* from 8/4 stock (about 1¾"-thick). The goal is to end up with 3"-square blanks, which isn't too difficult. But there is a procedure I follow to make it a bit easier.

First off, I like to size the blanks *after* they're glued together so I don't have to fuss with keeping the edges aligned perfectly. So the pieces start out oversized, and I just make sure the faces being glued together are flat and smooth.

After the glue's dry and two adjacent faces are jointed flat, the blanks can be cut 3" square. You can use a table saw to do this, but to be honest, 3" hard maple will give a contractor's saw a real workout. Instead, I ran the legs through a thickness planer until they were 3" square.

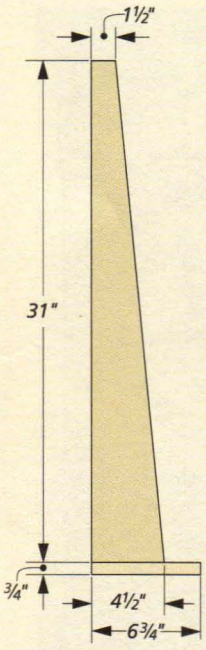

TAPER JIG

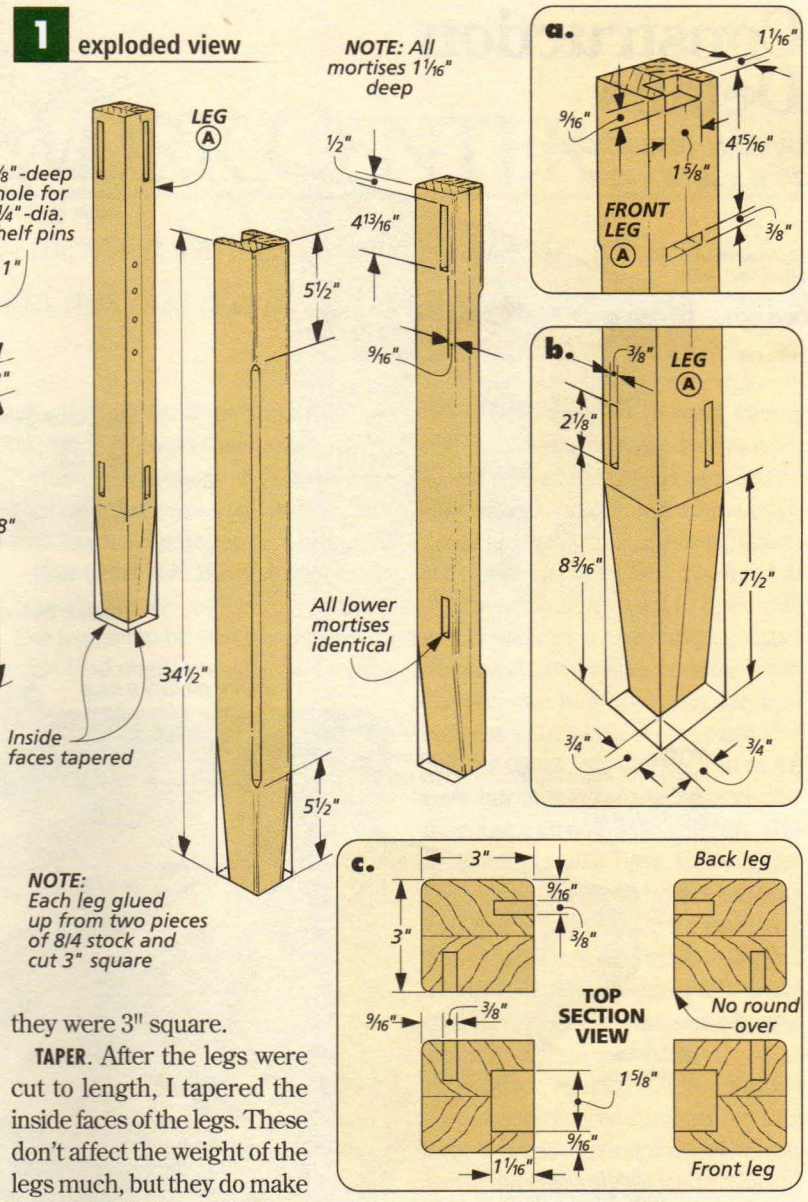

TAPER. After the legs were cut to length, I tapered the inside faces of the legs. These don't affect the weight of the legs much, but they do make them look "lighter."

Since the legs are 3" thick, I tapered them in two steps. First, after drawing the tapers on all the legs, I rough cut them on the band saw, staying about 1/16" from the layout line.

Next, instead of grabbing a sander (and a dust mask), I cleaned up each taper on my table saw. With most of the waste removed, this is really just a skim cut, so it's not quite as taxing

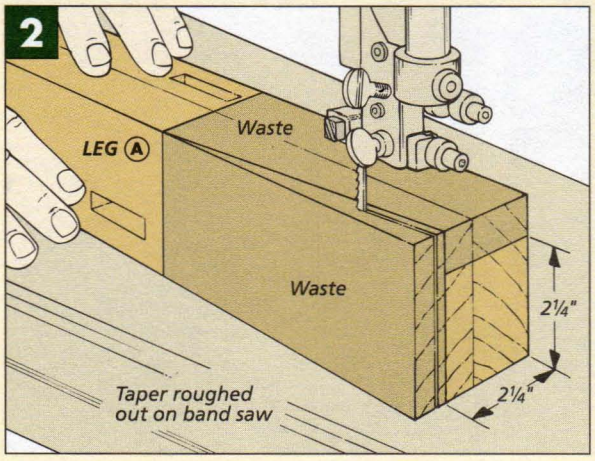

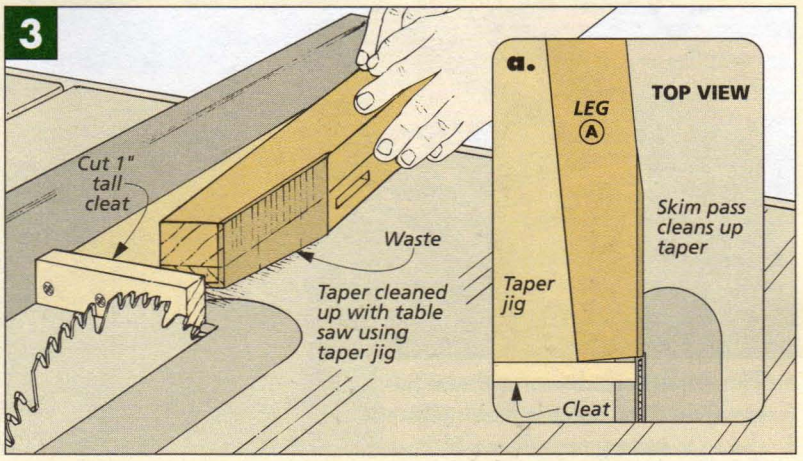

on the saw. And with a good, sharp blade, there won't be much sanding or burning to clean up afterwards.

MORTISES. Once the tapers are cut, the legs have "inside" and "outside" faces, and the mortises for the rails can be cut on the *inside* faces. All the mortises are set back 9/16" from the outside faces of the legs. I should also point out that the lower mortises are identical, as indicated in Fig. 1b. And Figs. 1, 1a, and 1c will give you all the information you need to cut the upper mortises on the ends and back.

The unusual mortises are the ones that hold the two horizontal rails that create the drawer opening, as you can see in Fig. 1a. I'll show you the steps for making these two mortises (Figs. 4 and 5), but the procedure is the same for *all* the mortises.

First, most of the waste is removed by drilling overlapping holes with a Forstner bit (Fig. 4). Note: You can also use a brad point bit to rough out the mortises, but you won't be able to drill *overlapping* holes, so there will be more clean up work to do.

All that's left is to clean up the mortises. I don't know of any shortcuts here. The waste has to be carefully pared away with a sharp chisel until the walls of the mortise are straight and square, as shown in Fig. 5.

HOLES FOR SHELF PINS. After the mortises are cleaned up, there are just a few odds and ends left. The first thing I did was drill the holes for the shelf pins that will hold the adjustable shelf later. (Fig. 1 shows their locations.) You won't install the shelves for a while, but it's easier to drill these holes now before the base is assembled.

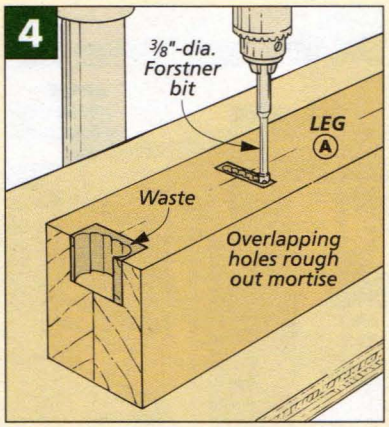

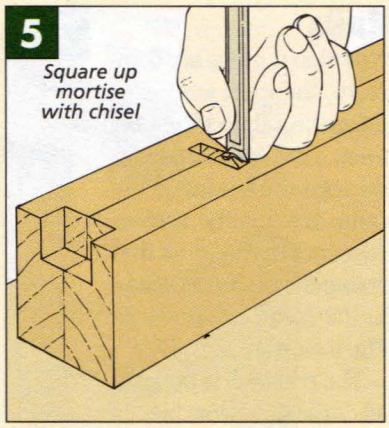

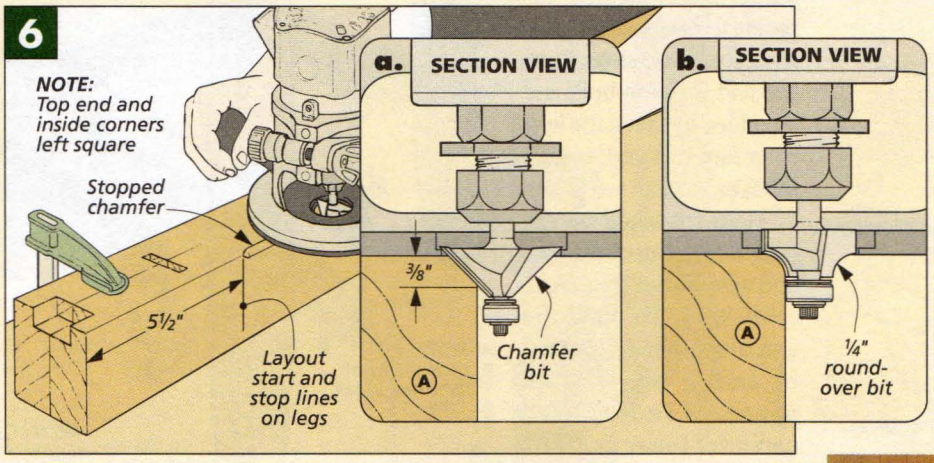

CHAMFERS & ROUNDOVERS. To complete the legs, there are two routed profiles to add: a chamfer and roundover.

To dress up the outside corner of each leg, I routed a stopped chamfer. Fortunately, with 3" square legs, you won't need any special setup. Simply lay out the start and stop lines and rout them with a hand-held router, as shown in Figs. 6 and 6a.

Once you've routed the chamfers, carefully inspect the ends of each. The problem with routing stopped chamfers is that the ends can end up looking a bit lopsided, as you can see in the margin photo. But this can be fixed easily. Simply wrap a piece of sandpaper around a dowel and sand the chamfer. Don't overdo it though — it will only take a few strokes.

The last thing to do is rout a 1/4" roundover on three edges and the bottom end of each leg, as shown in Fig. 6b. (I left the inside edge square, as shown in Fig. 1c.) These roundovers relieve the sharp edges, which you'll appreciate if you ever knock your knee into one of the legs.

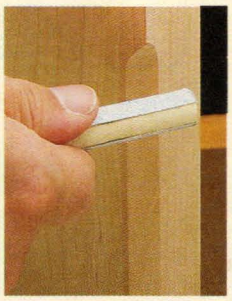

▲ *The end of a routed stopped chamfer often needs to be touched up with a little sandpaper.*

ROLL-AROUND OPTION

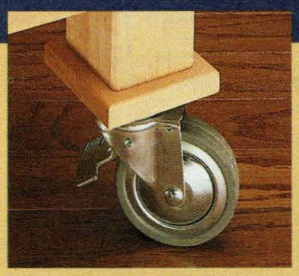

A work station doesn't have to be stationary. You can easily make it mobile by mounting a caster at the bottom of each leg. This will require a few minor changes, as you can see in the drawing at right. The legs will end up a little shorter and are not tapered, and the metal plate on each caster requires an additional mounting base.

However, don't use just any caster. Find a set that is double-locking. In other words, make sure the caster's brake prevents the wheel from turning *and* from swiveling on its plate.

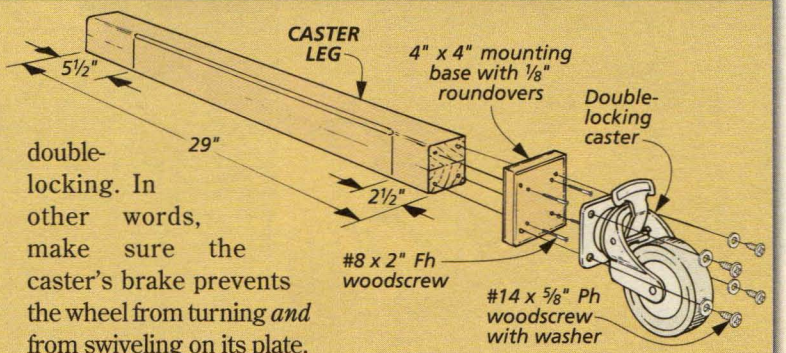

Rails

Now that the legs are complete, the next step is to make the rails that connect them. Like the mortises in the legs, the tenons on the rails are pretty typical (except for the ones that create the drawer opening in the front, as shown in Fig. 9 on page 11).

The real trick is keeping all these workpieces straight. So I tackled this part of the work center construction in two steps. First, the end rails are built and are glued between the legs to create the end assemblies, as you can see in Fig. 7. Then I worked on the rails that connect the two end assemblies (Fig. 9).

END RAILS. To build the end assemblies, I started by cutting the 3/4"-thick *upper end rails (B)* and narrower *lower end rails (C)* to size, as indicated in Fig. 7.

TENONS. Next, I worked on the tenons on the ends of these rails. The "frame" that these rails will create has to be strong, otherwise the thick legs won't do much good. Generally, my rule of thumb is to make the tenons a third of the thickness of the workpiece (usually 1/4" on a 3/4"-thick piece of stock). But as you can see in Figs. 7a and 7b, these tenons are a little "beefier" (3/8") — half the thickness of the stock. (I had planned for this earlier when drilling the mortises.)

7 exploded view

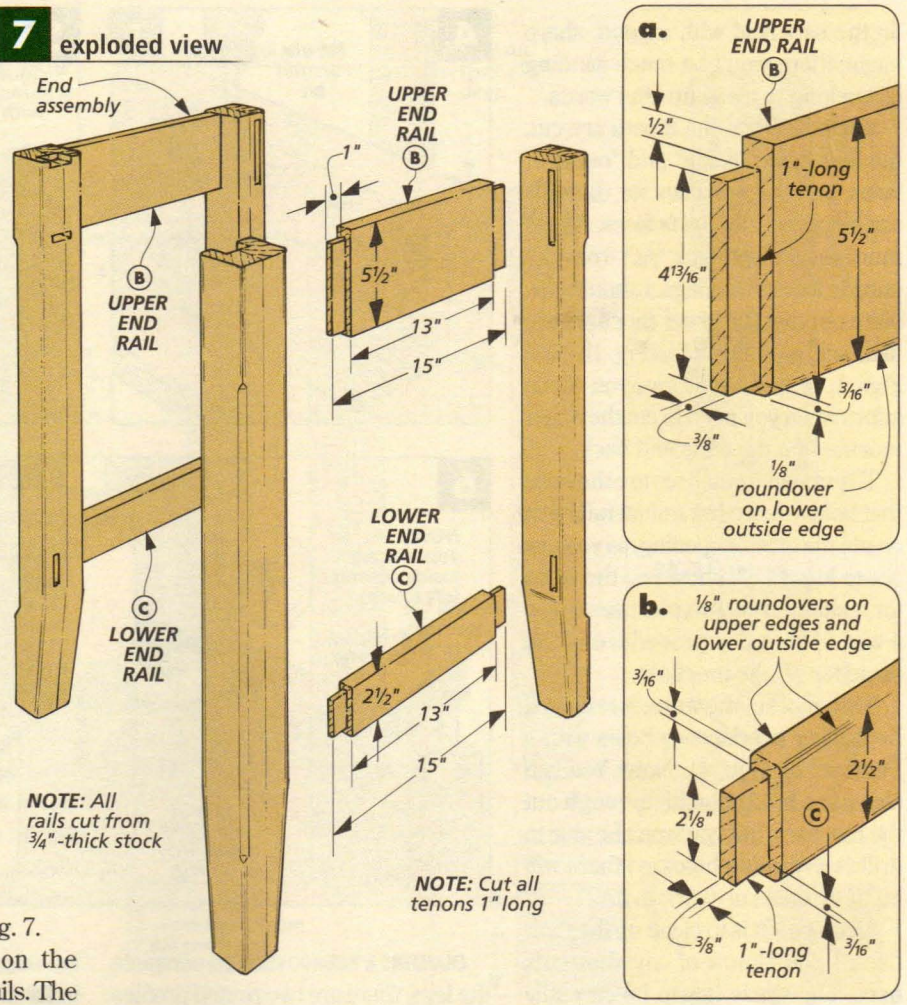

Even with thicker tenons, the procedure isn't any different. I decided to make mine on the table saw with a dado blade. First the cheeks of the tenon are cut in multiple passes, as shown in Figs. 8 and 8a. Then the rails can be set on edge, and the shoulders on the top and bottom can be cut (Figs. 8b and 8c). But I should point out one thing here.

Most of the tenon shoulders will be 3/16", just like the shoulders on the cheeks. But take a look at Fig. 7a and 8c; the top shoulders on the upper rails are much larger — 1/2". (This 1/2" of stock kept me from breaking through the end of the leg when chopping the mortises.) The important thing here is that you cut these shoulders so the tops of the rails will end up flush with the tops of the legs when the ends of the base are assembled.

8

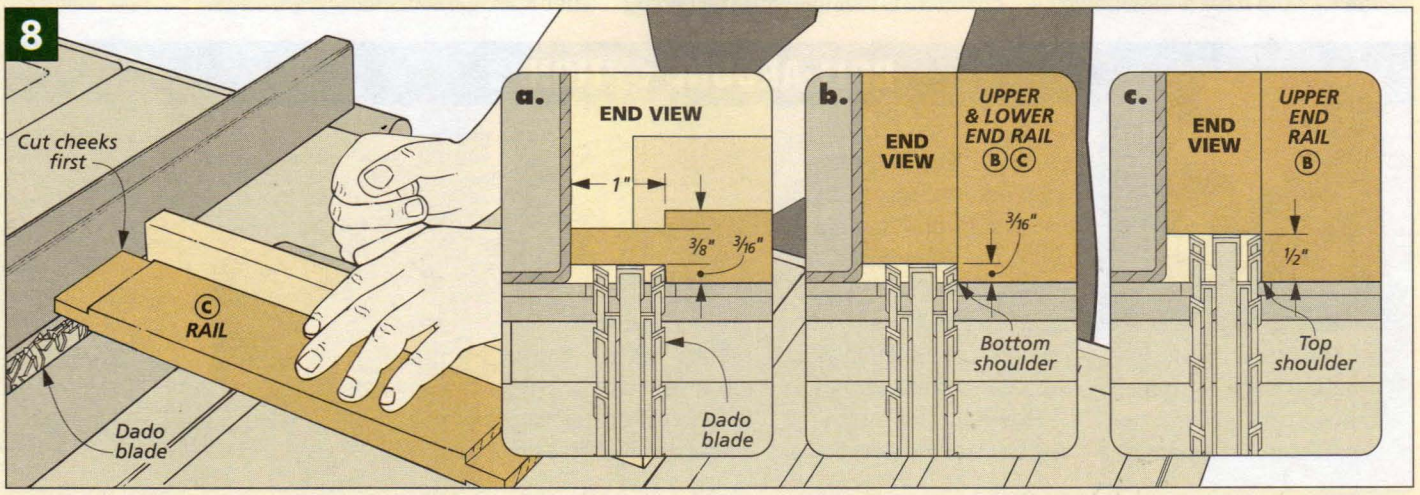

ROUNDOVERS. Before putting the legs and end rails together, I softened the edges of the rails that would end up being exposed. This means that the lower outside edges of the upper rails get 1/8" roundovers, as in Fig. 7a. While on each lower rail, the lower outside edge *and* two upper edges are routed (Fig. 7b).

END ASSEMBLY. Now it's time to put the ends of the base together, as illustrated in Fig. 7. This procedure won't be difficult, but it's a good idea to double check that each assembly ends up with a front and a back leg. (It'd be easy to get confused and end up with an assembly with two fronts or two backs.)

FRONT/BACK RAILS. While the glue is drying, you can begin on the front and back rails, as shown in Fig. 9. Except for the two upper front rails, the *upper back rail (D)* and *lower front/back rails (E)* are built exactly the same as the end rails (Figs. 9a and 9c). They're first cut to size. Then tenons are cut on the ends, and the exposed edges are rounded over.

DRAWER RAILS. The *upper* and *lower drawer rails (F)* create the opening for the drawer, so they're a little different than the other rails, as you can see in Fig. 9. However, the techniques for making them are pretty much the same. It's just that the workpieces are oriented horizontally (instead of vertically, like the other rails).

Because these rails are horizontal, the cheeks aren't cut first. Instead, I started with the shoulders on each end, as you can see in the left drawing in Fig. 10. This way, I was able to check the fit of these shoulders in the open mortises at the top of the legs (refer to Fig. 5 on page 9).

After cutting the shoulders, I cut the cheeks, sneaking up on the height of the blade (right drawing in Fig. 10). Here, the two drawer rails are different from each other, as shown in Fig. 9b. The lower rail has a typical centered tenon. The upper rail has an offset tenon with just one cheek. This puts the top of the upper rail flush with the tops of the legs.

ROUNDOVERS & ASSEMBLY. These rails are rounded over just like the other rails. Then the rails and end assemblies can be glued together. At this point, you could include all five rails, but to make the assembly easier, I set the upper drawer rail aside for now. It can be glued and screwed in place later, as shown in the photo below.

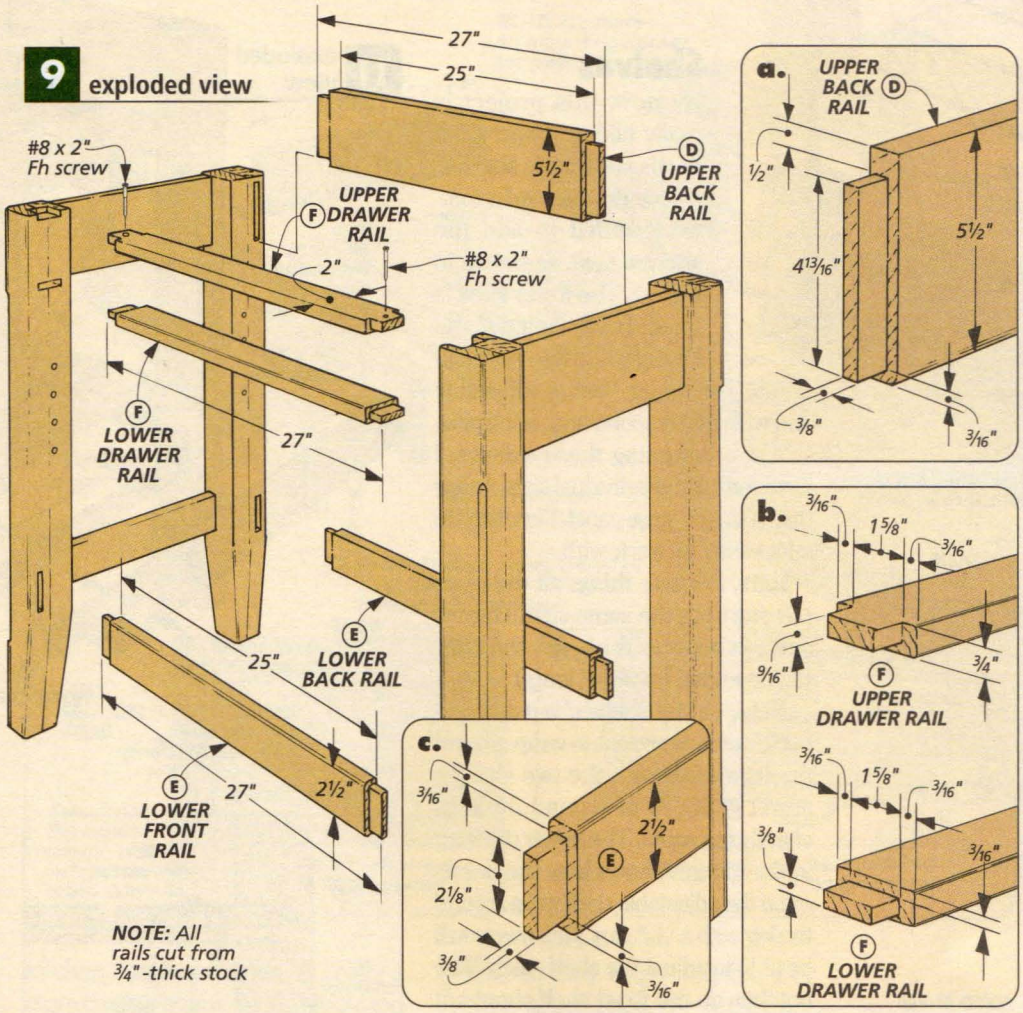

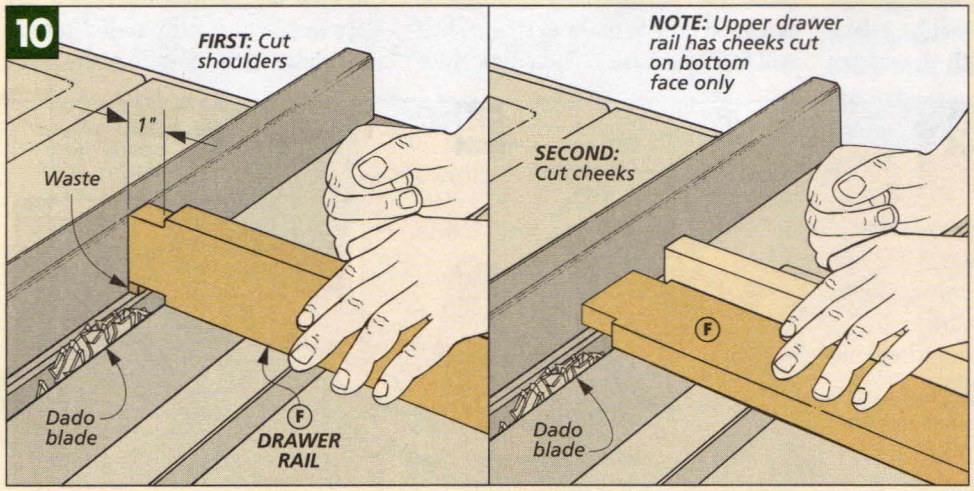

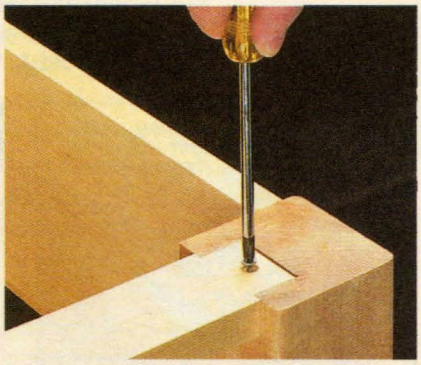

▲ *With the open mortises on the top of the front legs, the upper drawer rail can be glued and screwed in place after the base has been assembled.*

Shelves

By now, this project is really taking shape. All it needs is a couple shelves, a wide drawer, and a top.

I decided to add the shelves next, as shown in Fig. 11. The lower shelf is fixed. It fits "inside" the lower rails, as shown in the photo. The upper shelf is adjustable and will rest on spoon-style shelf pins.

When designing these shelves, I liked the look of individual slats, rather than a single, large panel. Plus, they're a lot easier to work with.

SLATS. For one thing, all the *slats (G)* start out the same size. They're cut to fit between the lower end rails. (Mine ended up 28¾" long.)

Next, on the shelves' outside corners, notches are cut to wrap around the legs. However, the two shelves aren't going to fit around the legs exactly the same. The upper drawing in the margin shows how the notches on the adjustable shelf wrap around the leg with a 1/16" gap. This way, you'll be able to adjust the shelf easily. The notches on the fixed shelf should fit tight (lower drawing in margin).

To cut the notches, I grabbed four slats and laid out each notch. Then the notches were cut with a sabre saw (or band saw), as shown in Fig. 12.

There's one other difference to note between the shelves. I wanted to round over all the "exposed" edges of the slats. So on the adjustable shelf, the outside edges of the slats (including the ends) are rounded over (Fig. 11a), while on the fixed shelf the outside edges (the ones that fit against the rails) are left square (Fig. 11b).

ADJUSTABLE SHELF. With the edges rounded, I focused my attention on the adjustable shelf. To "tie" the slats together, I made two simple *braces (J)* with chamfered ends, as shown in Figs. 11, 11a, and 13.

When screwing the slats to the braces, the goal is to keep the gaps between them consistent. This is easy to do. I screwed the outside slats in place first, as shown in Fig. 13. (This is a good time to make sure the shelf will fit in the base.) Then the center slat can be added. Now when the last two slats are centered in their openings, all the gaps will be identical.

FIXED SHELF. Next, I worked on the fixed shelf. At this point, there's nothing for the shelf to rest on, so the first thing to do is screw *cleats (H, I)* to the rails, as shown in Figs. 11 and 11b.

As you can see in Fig. 14, I turned the base upside down to screw the slats in place. (I also added plastic tack glides to the bottom of the feet.)

ADJUSTABLE SHELF
(Bottom Section View)

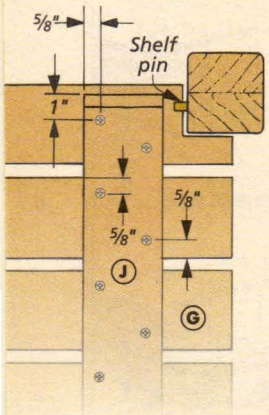

FIXED SHELF
(Bottom Section View)

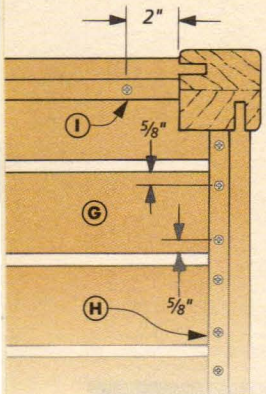

11 exploded view

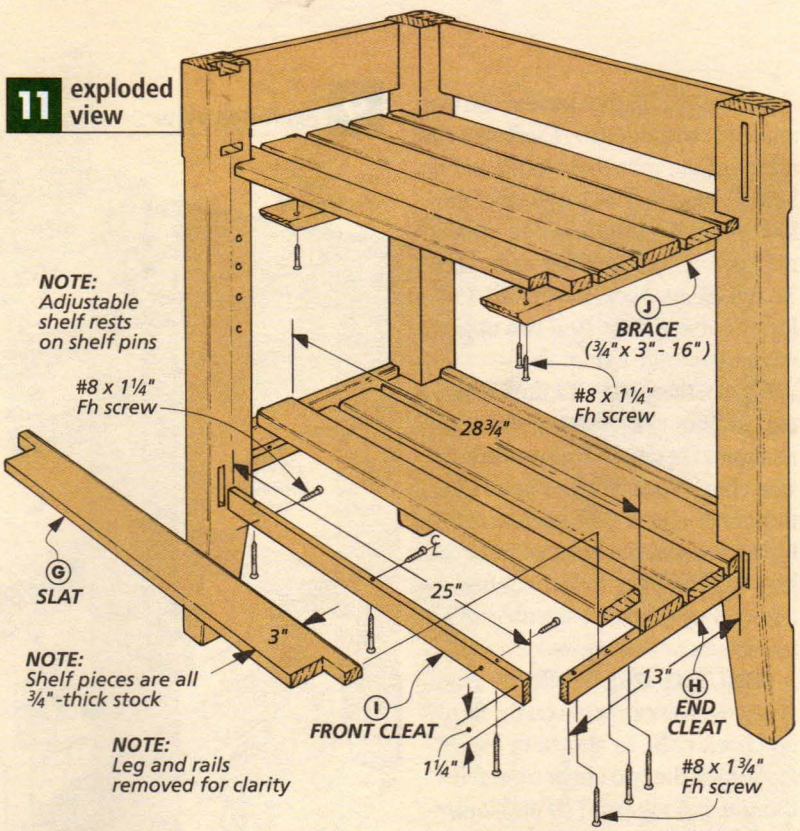

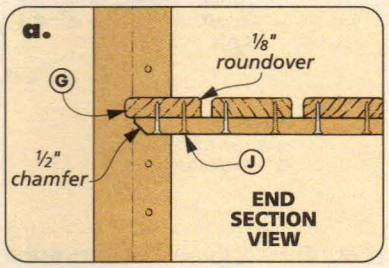

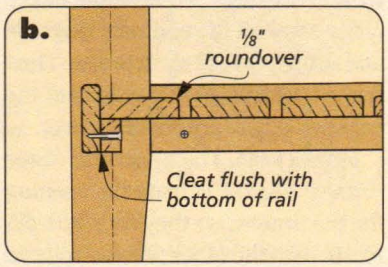

12

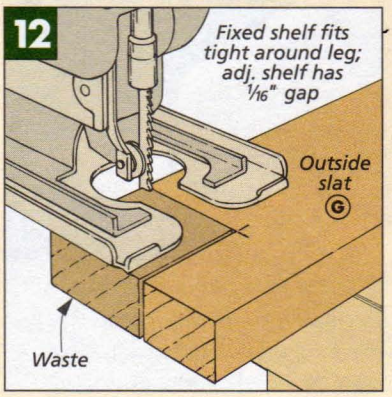

13

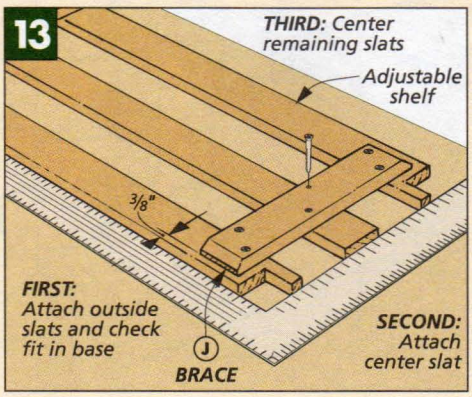

14

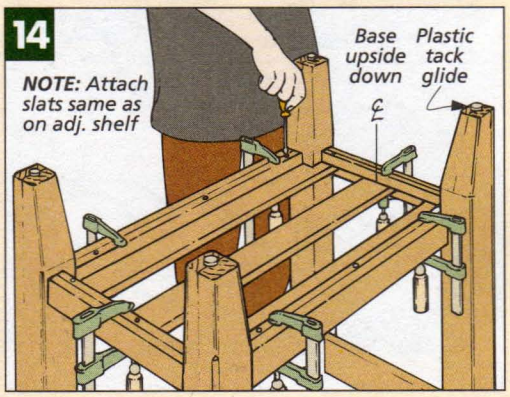

Drawer & Top

At this point, the base is open. So while I still had access through the top, I added the single, wide drawer that you can see in Fig. 15. Then to complete the center, the thick top can be added, as shown in Fig. 16 below.

DRAWER. This wide drawer is built to fit between the legs (Fig. 15). But when sizing the ½"-thick *front/back (K)* and *sides (L)*, keep in mind that the drawer should end up 1" narrower than the opening to allow for the metal slides (Fig. 15b).

I joined the drawer with ½" machine-cut dovetails and centered a ¼" plywood *bottom (M)* on the bottom pin. Then to cover the metal slides, I added a *false front (N)*. A simple kerf on this piece gives the impression that there are two drawers, and oversized shank holes make it easy to center the false front in the drawer opening (Fig. 15a).

INSTALLATION. Now the drawer can be installed on the full-extension slides. This really isn't very complicated, and on page 16, I'll walk you through my procedure step-by-step. (Later, after the finish was applied, I screwed a couple pulls to the drawer, as shown in Figs. 15 and 15b.)

TOP. With the drawer in place, I began work on the *top (O)*, which you can see in Fig. 16. Unlike a kitchen counter, this top is really a large cutting board. So I built the top panel with a durable, edge grain face from 8/4 stock (planed 1 11/16" thick).

The top should end up 1½"-thick and *about* 22" wide. I actually ripped the thirteen strips a little oversize (1 9/16") so they could be planed or sanded later. Then the strips are turned on edge so the edge grain faces up, as illustrated in the upper right detail on page 7.

I glued these strips into *two* panels. This way, if the panels end up with any ridges, they can easily be planed flat with a 12" thickness planer. (Or you can glue up a single panel and sand it with a belt sander.)

Now you have two flat panels that can be carefully glued together. But even when that's done, this large, thick panel will still need to be cut to length. There are a number of ways to do this, but I used my table saw and a sharp crosscut blade. (For more on this, see Shop Notes on page 17.)

With the panel cut to size, I wanted to soften the sharp edges. So the four corners are rounded (Fig. 16b), and the top and bottom edges are rounded over (Fig. 16c).

Then before attaching the top to the base with figure-8 fasteners (Fig. 16a), I applied several coats of an oil finish. In fact, to prevent the top from cupping, it's a good idea to apply finish to *both* faces of the panel.

15 exploded view

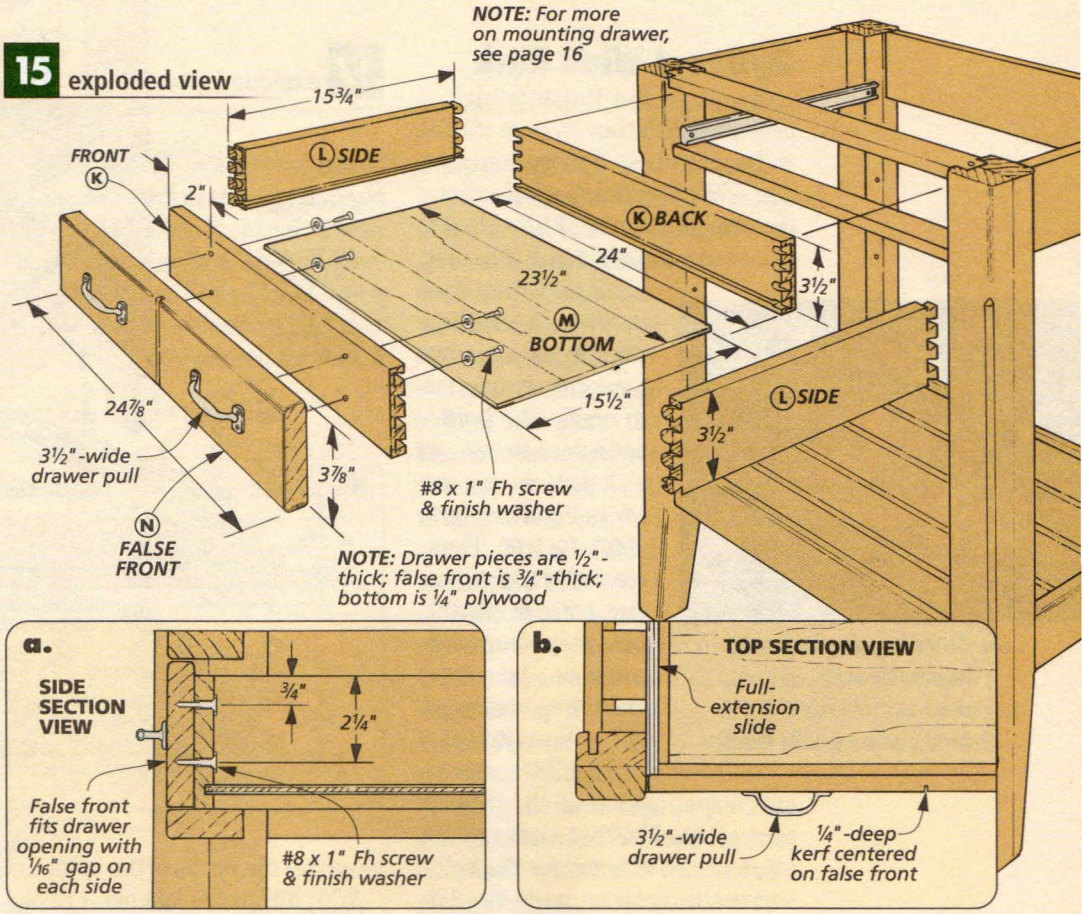

16

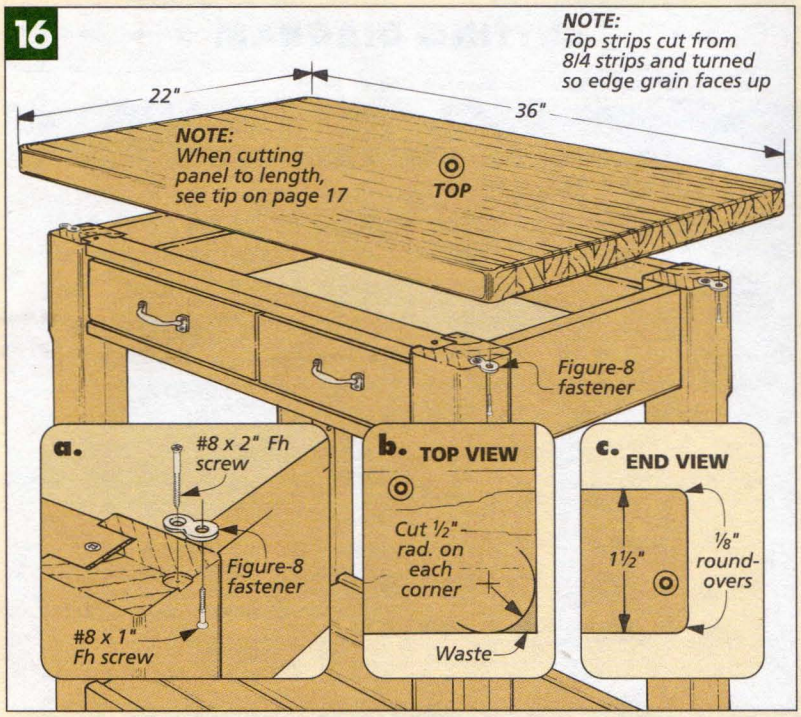

Optional Wine Rack

Other than the finish (which is described in the box on page 15), the work center is essentially complete. And while standing back to admire the project, I decided I just had to build one more addition: a wine rack.

▲ *To add a wine rack to the adjustable shelf, all you need to make are a few pieces with circular cutouts.*

All this wine rack requires is just three workpieces — two that have circular cutouts to cradle the bottles and a third piece to act as a stop, as you can see in Fig. 17 at right.

CUT TO SIZE. These pieces are all the same size, but to begin with, I cut them extra wide so the circular cutouts would be easy to lay out.

The first thing to draw is a 1¾"-radius circle on each end of all three workpieces. Next I laid out a row of these same circles 4" apart for the bottle support, as you can see in Fig. 17a. Finally, a row of smaller circles can be drawn on one of the remaining workpieces for the necks of the bottles.

17 exploded view

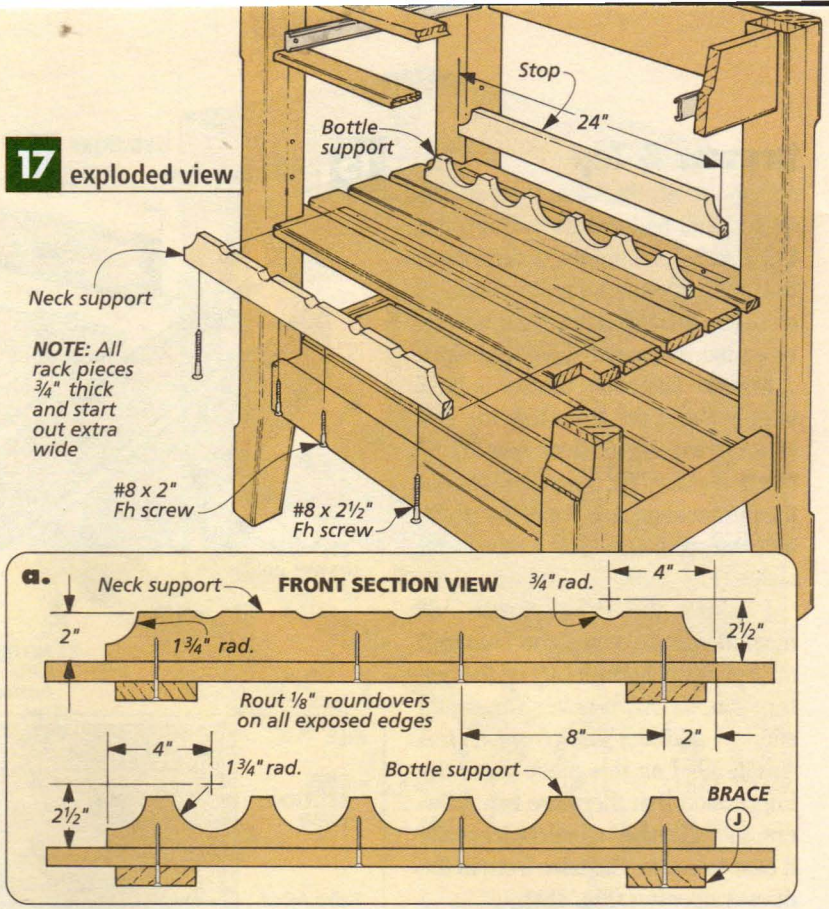

With the circles laid out, I ripped the pieces to width. Now the circular openings can be cut with a band saw (or a sabre saw) and sanded smooth. (A drum sander chucked into the drill press works great.)

Now before attaching the back and two support pieces to the adjustable shelf, it's a good idea to soften the sharp edges by routing ⅛"-rad. roundovers on the ends and top edges.

Attaching the support pieces and stop isn't tricky. They're just screwed to the adjustable shelf, as shown in Fig. 17. But note that you'll need to use two different screw sizes. That's because the screws near the ends will go through the braces, as well as the shelf slats (Fig. 17a). W

MATERIALS & SUPPLIES

A	Legs (4)	3 x 3 - 34½
B	Upr. End Rails (2)	¾ x 5½ - 15
C	Lwr. End Rails (2)	¾ x 2½ - 15
D	Upr. Back Rail (1)	¾ x 5½ - 27
E	Lwr. Fr./Bk. Rails (2)	¾ x 2½ - 27
F	Upr./Lwr. Dwr. Rails (2)	¾ x 2 - 27
G	Shelf Slats (10)	¾ x 3 - 28¾
H	End Cleats (2)	¾ x 1¼ - 13
I	Fr./Bk. Cleats (2)	¾ x 1¼ - 25
J	Braces (2)	¾ x 3 - 16
K	Dwr. Fr./Bk. (2)	½ x 3½ - 24
L	Dwr. Sides (2)	½ x 3½ - 15¾
M	Dwr. Bottom (1)	¼ply. - 15½ x 23½
N	Dwr. False Fr. (1)	¾ x 3⅞ - 24⅞
O	Top (1)	1½ x 22 - 36

- (1 pr.) 16" Full-Extension Drawer Slides
- (4) ¼" Spoon-Style Shelf Pins
- (4) Figure-8 Table Top Fasteners
- (6) #8 x 2" Fh Woodscrews
- (30) #8 x 1¼" Fh Woodscrews
- (22) #8 x 1¾" Fh Woodscrews
- (8) #8 x 1" Fh Woodscrews
- (4) #8 Finish Washers
- (4) Plastic Tack Glides
- (2) 3½"-Wide Drawer Pulls

CUTTING DIAGRAM

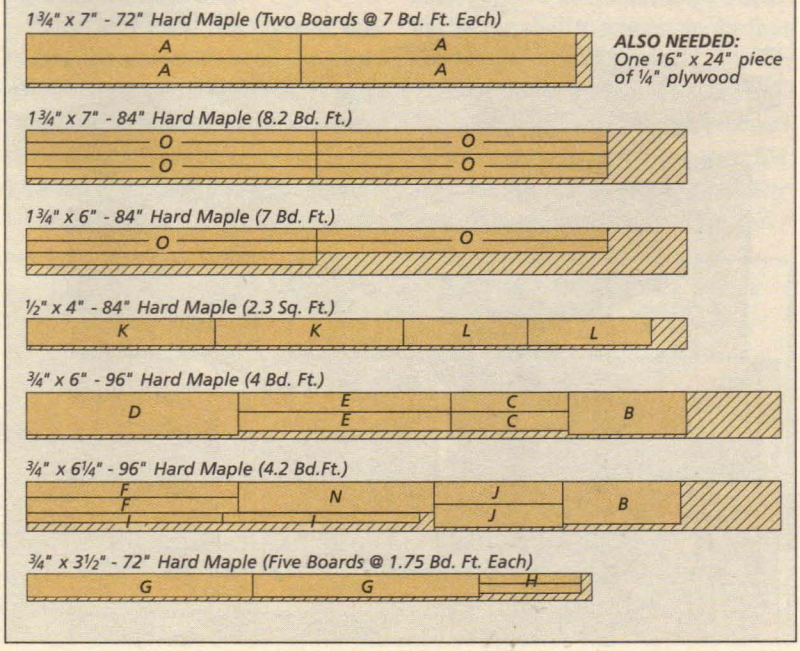

PASTRY BOARD

Since I always buy extra lumber to allow for defects in the wood (and mistakes made by the builder), I ended up with some extra 8/4 stock. And rather than toss the pieces into my cutoffs bin, I decided to make a pastry board.

What makes this pastry board unique are two cleats that are screwed to both faces of the panel. These "hook" the edge of a table or countertop just like an old-fashioned bench hook in the shop. This way, you can roll out dough without the board sliding around.

1 exploded view

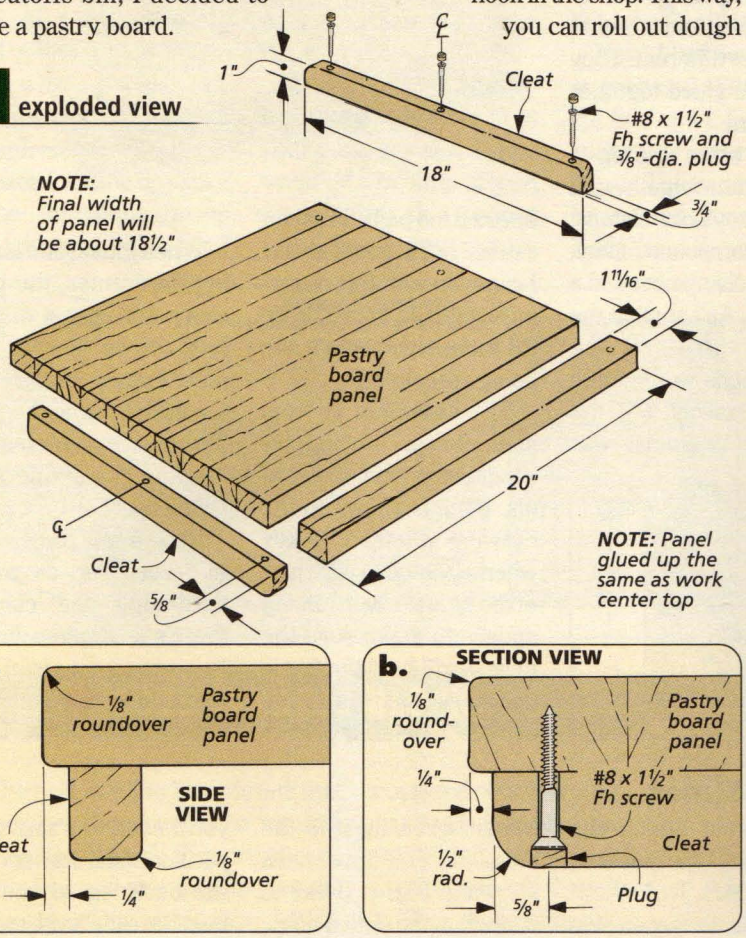

CUT TO SIZE. Building this pastry board is a lot like building the top (page 13). Besides the two cleats that are added later, the only real difference is the size of the panel.

The first thing to do is joint and plane the pieces so their faces are flat and parallel. Then they can be ripped to width. (For now, mine were ripped 1 1/16" wide.)

Like the top panel, I glued the strips into two half panels with their edges face up. This way, I could remove any tiny ridges or shoulders by running them through a portable thickness planer. (You could also glue the panel together all at once and simply sand it smooth with a belt sander.)

After gluing the two panels together and softening all the corners and edges, you can add the cleats. They're cut from ¾"-thick stock, and as you can see in Figs. 1a and 1b, their ends are rounded over and edges are softened just like the panel.

The cleats are simply screwed to the panel. But to hide the screws, I countersunk them and plugged the holes with ⅜"-dia. wood plugs. W

▲ *This pastry board is built the same as the work center's top. Plus there are cleats to keep it from sliding while you work.*

GETTING TO THE FINISH

When it came to the finish, I treated this work center like two projects.

TOP. The top was finished like a large cutting board. As was mentioned on page 13, I wiped an oil finish on all the surfaces of the top panel (O). An oil finish doesn't create a thick film, which could flake and peel after being cut with a knife. And later on, it can be renewed easily by applying an additional coat.

BASE. As for the base of the work center, you have a couple of options to consider. I wanted a finish that would withstand a lot of "traffic" and plenty of spills, so I applied several coats of a satin polyurethane to the base. But for a much different look, you could also paint the base, as shown in the photo. This really makes the cutting board top stand out, and you can choose a color that will match your kitchen cabinets. Plus, since paint covers the wood grain, you can build the base out of a less expensive wood.

The base of the work center can be painted to match (or complement) the cabinets in your kitchen. ►

SHOP NOTES

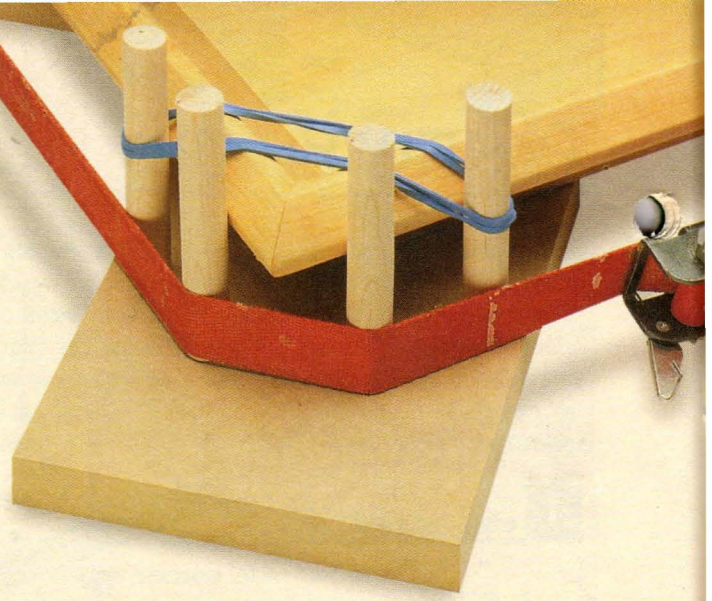

Compound Miter Assembly Jig

Workpieces with compound miters are usually attached one piece at a time — either nailed to a wall or as molding around a cabinet. But the two picture frames with cove molding and the serving tray are different. They have to be glued together into a frame.

Often when gluing a mitered frame together, I'll reach for my band clamps. But with compound miters, the band clamps needed a little help. As I applied the clamping pressure, the frame pieces would "fold in" on themselves — the clamping pressure was directed too high. So as you can see in the photo above, I came up with this clamping corner jig to help keep the frame together as it was being assembled.

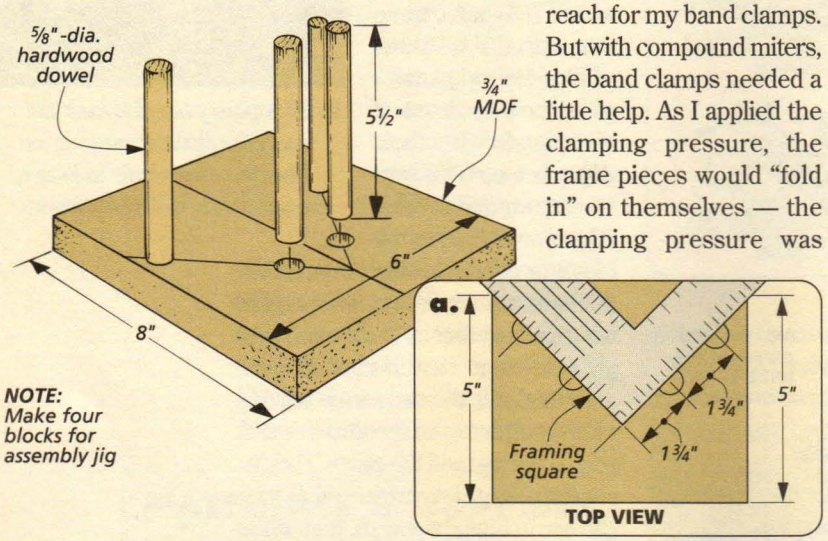

The assembly jig consists of four rectangular scraps, each with four dowels. (One is shown in the drawing at left.) The key when assembling each part of the jig is to use a framing square to make sure the dowels will hold the frame pieces square, which you can see in detail 'a' at left.

When gluing and clamping the frames, the band clamp fits against the bottom of the dowels, and these dowels "capture" the top of the frame, keeping the pressure centered *and* keeping the frame from falling apart.

If the frame pieces want to "creep" up as you're tightening the clamps, there's a simple solution. Just wrap a couple of rubber bands around the dowels, as shown above.

Installing Full-Extension Slides

When installing drawer slides, I usually separate the two halves and mount the "case" half first. Then getting the drawer half positioned correctly takes a little measuring (and sometimes, some repositioning).

However, for the kitchen work center on page 6, I worked "backwards," using the case half of the slide to position and attach the drawer half of the slide first.

DRAWER HALF. To do this, I first set the drawer on pennies, as you can see in Fig. 1. This will create the 1/16" gap between the drawer and the rail below it.

Now setting the "assembled" drawer slide on the bench, I pulled the drawer half out of the slide and began screwing it to the sides of the drawer, as shown in Fig. 1. (I like to screw into the slotted holes, so some adjustments can be made later, if necessary.)

CASE HALF. After the drawer half of the slide has been attached, the case half can be removed and installed inside the case. For the base of the work center, you'll need to transfer the position of the drawer rail to the back leg so you can hold the slide level, as illustrated in Fig. 2.

Now when screwing the case half of the slide in place, just make sure it's set back from the front edge of the rail to allow for the false front of the drawer, as shown in Fig. 3.

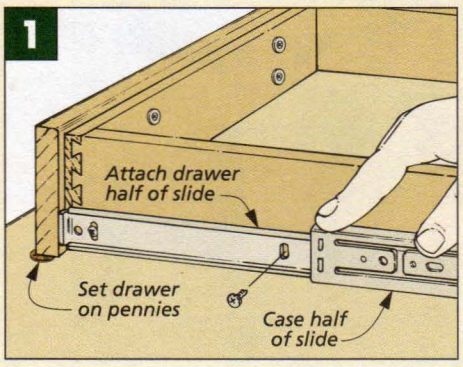

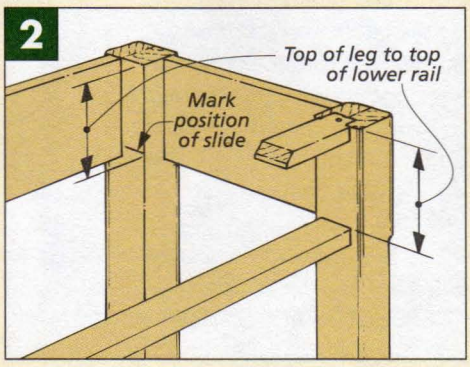

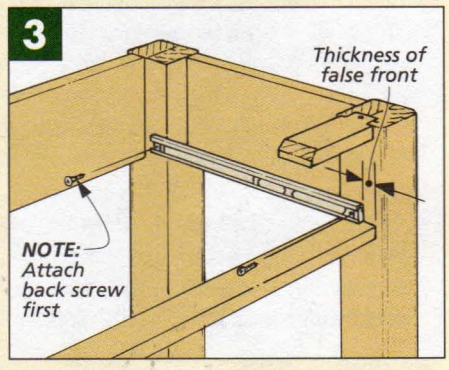

Crosscutting Large Panels

Getting a clean, square crosscut on a long panel can be a real trick. And for the top of the work center (page 13), my usual methods just wouldn't work. The panel was a little too wide to use a crosscut sled on the table saw. And crosscutting the 1½"-thick hard maple panel with a circular saw and a guide would have left a rough cut.

Instead, I came up with a method for cutting the top on a table saw with a good crosscut blade. What I did was screw a temporary runner to the bottom face of the top panel. Like the runner on my miter gauge, this hardwood strip guides the panel across the saw so the cut ends up clean and square, as illustrated in the drawing above.

To do this, start by making a long runner to fit in your table saw slot. (Mine was a ⅜" x ¾" strip of solid wood.) Size this runner carefully — you want a snug fit, but not so tight that it will bind.

Next, I laid out two lines on each end of the panel: a cut line and a line for the runner, as you can see in Fig. 1. The runner should be located the same distance from the cut line as the saw blade is from the miter gauge slot.

With the lines drawn, the runner can be carefully screwed to the top panel. (As you can see in Fig. 1, I used a framing square to keep it aligned.)

With the runner in place, simply flip the panel over and guide it over the saw, making sure you have a cutoff support to "catch" the panel as you push it through the saw blade.

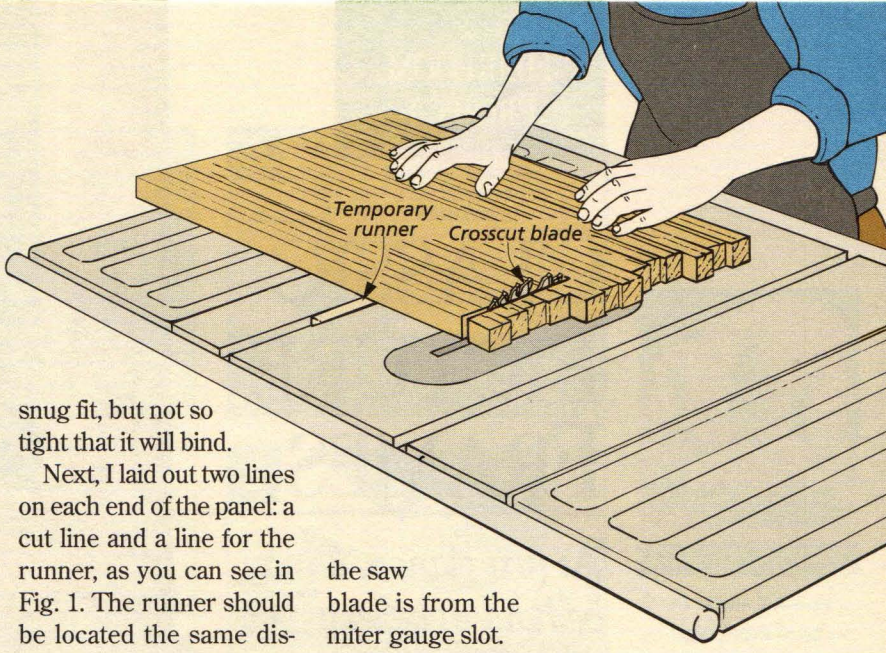

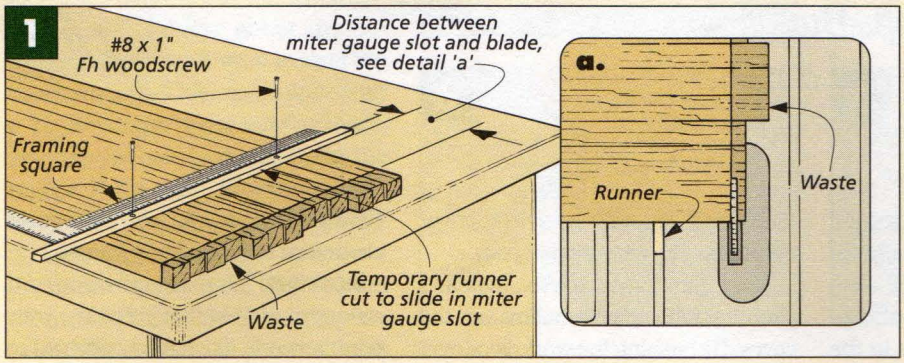

COVE SANDING BLOCK

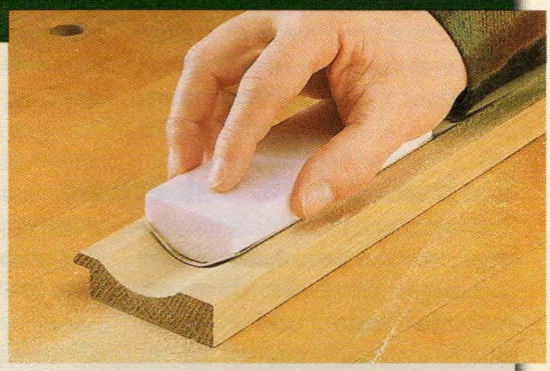

The best sanding block is one that matches the shape to be sanded. So when it came time to smooth the large coves on the picture frames and the serving tray, I made some custom sanding blocks from 1½"-thick foam insulation board.

TRACE PROFILE. To do this, first I butted the foam block against the molding and traced the profile, as shown in the left photo below.

SHAPE THE BLOCK. Next, the center photo shows the profile being roughed out on the band saw. (You can also use a hand saw or file to create the rough shape.)

Then to smooth out the shape, place some adhesive-backed sandpaper across the workpiece with the cove and rub the block across the sandpaper (right photo below).

SAND THE COVE. To use the sanding block, remove the sandpaper from the workpiece and stick a new piece on the curved face of the sanding block, as in the photo above.

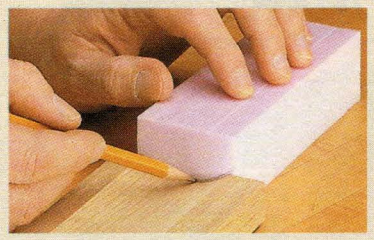

***Trace profile**. First trace the outline of the cove onto a small block of thick foam insulation board.*

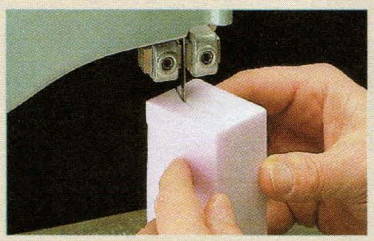

***Rough cut profile**. Next, use a band saw (or hand saw and file) to cut the profile to rough shape.*

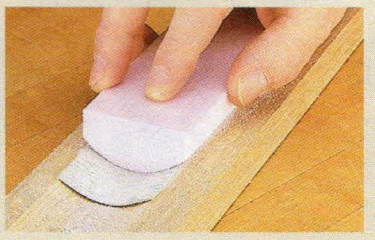

***Sand profile**. Smooth the profile by rubbing it across a piece of sandpaper stuck to the workpiece.*

HEIRLOOM PROJECT

CLASSIC PICTURE FRAMES

At first glance, it may be hard to believe that these frames were made in a home workshop. But all you need is a table saw and a router.

Over the years, I've made a good number of frames. But none of them have been quite like the ones you see in the photograph above. Most of the frames I've made in the past were built up from small, narrow moldings of various routed profiles. However, these frames all feature wide, sweeping coves that really set the frames off. But more interesting than how they look is how these coves are made. It may surprise you.

No, I didn't use a router. Instead I used my table saw to hollow out the coves. By pushing the workpiece over the saw at an angle, you can create a wide variety of coves. And if this technique sounds a bit odd or unfamiliar, don't worry. We've included a separate article on cutting coves on page 28. (You'll want to take a look at that article before building your frames.)

MOUNTING. One other thing. I'd strongly suggest that you have your print, artwork, or whatever else you're framing matted and ready to go *before* you build the frames. This way, you can make sure that your print and glass will fit the opening of your frame. (I learned this the hard way.)

Craftsman-Style Oak Frame

The first frame is probably the simplest, since it's flat and doesn't require any compound miters. I made my frame out of quarter-sawn white oak, but just about any wood will do.

Start by cutting the 3/4"-thick blanks for the frame to rough size. I made my blanks 4"-wide and about 9 to 10" longer than my matted print. This way, you can trim the frame pieces to exact width and miter them to length after you've created the profile.

CUT COVES. To cut the cove, set up a pair of fences on your table saw at a 30° angle to the blade, just as you see in Fig. 1. You want to position the fences so the cove will be roughly centered on the blank. Note: The blade should be square (90°) to the table for this particular cove. Cut the cove in multiple passes, taking shallow (1/16") cuts, until the cove reaches a width of 1 7/8" (Fig. 1b).

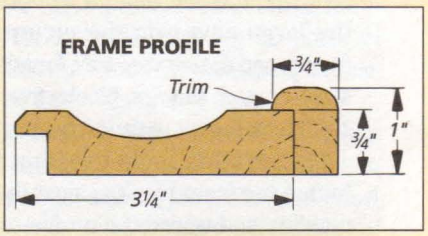

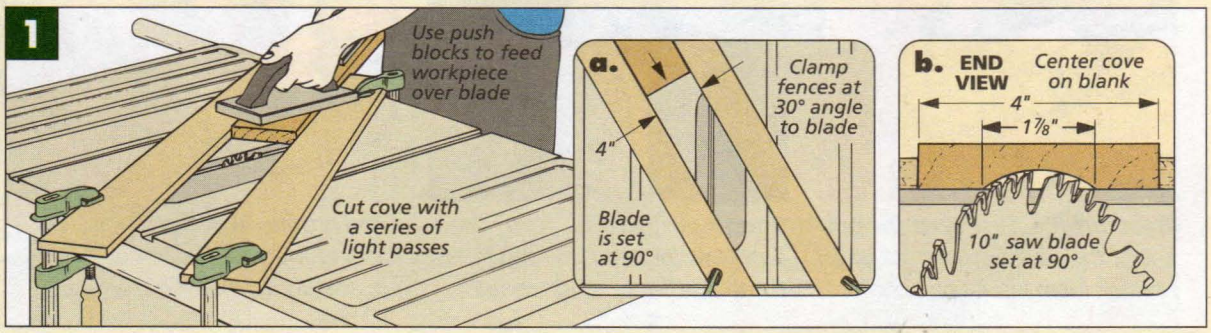

When you've finished cutting the coves, trim the workpieces down to their final width. The thing to watch here is that the shoulders on either side of the cove correspond with those shown in Fig. 2.

CHAMFER. Take a look at the small profile drawing of the molding on the opposite page. You'll notice that the top inside edge is chamfered. As you can see in Fig. 3, I made this chamfer on the router table.

While you're at the router table, it's a good time to cut a rabbet on the back side that will hold the glass and picture. Simply change over to a straight bit and flip the workpiece over. Fig. 4 shows this being done.

SAND COVES. Before going any further, you'll probably want to sand the coves smooth. This can be done with a "custom-made" foam sanding block, just like you see in the photo in the margin at the right. (For more information on this, see page 17.) I started with 80-grit sandpaper to remove the roughest marks and then worked through 100, 120, and 150-grit papers.

MITER PIECES. Once all the sanding is done, you can miter the pieces to length, like you see being done in Fig. 5. There are a couple of things to be aware of here. First, you obviously want the miters to fit together nicely. So spend some time setting up and checking your miter gauge.

Second, you want to make sure that you're cutting the pieces to the correct length so that when the frame is assembled, your glass and print will fit in the opening in the back. For some tips on doing this, turn to the box on page 25.

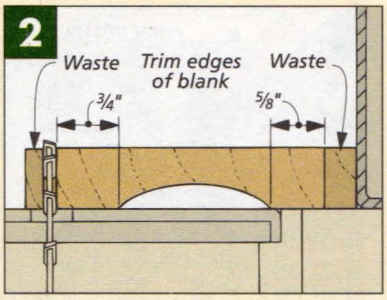

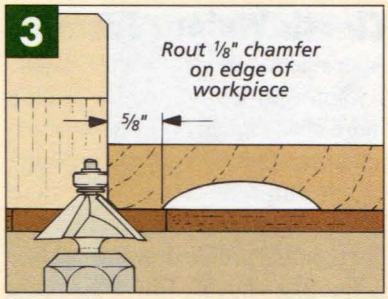

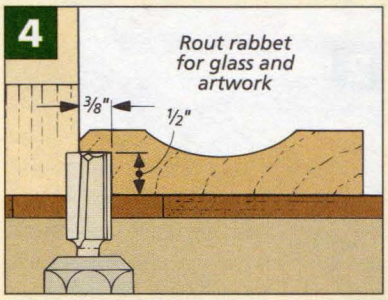

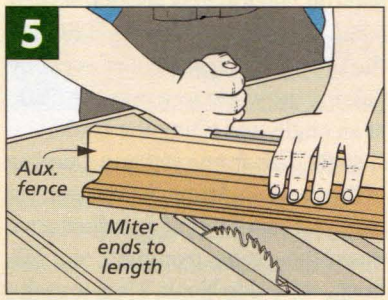

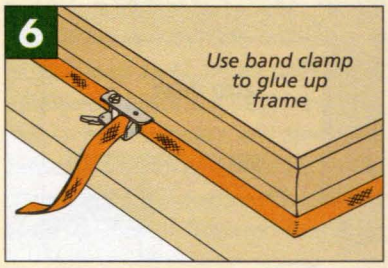

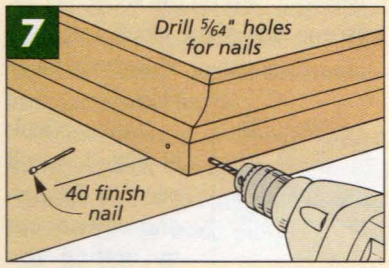

▲ *A small block of rigid foam insulation can be used to make a custom sanding block. Turn to page 17 to see how it's done.*

ASSEMBLY. In Fig. 6, you can see the mitered frame pieces being glued up. The trick here is to keep all the miters tight. All it takes to do this is a common band clamp to hold the frame square while the glue sets up.

Once the glue is dry, I like to reinforce each corner of the frame with a couple of 4d finish nails, just like in Fig. 7. But to avoid breaking the glue joint when hammering in the nails, drill a small hole for each nail first.

TRIM. To complete the frame, I added a trim piece all around the outside of the frame. This is just a strip of wood that has been rounded over on its two top edges, like in Fig. 8 below. Not only does it help to dress up the frame a bit, but it also covers the nail holes that you just made.

To help position the trim, a shallow rabbet is routed on the inside edge (Fig. 9). Then the trim pieces are mitered to length and glued to the outside of the frame, as in Fig. 10. To help position the molding around the frame, I mitered the end of a small scrap of the molding (Fig. 10a).

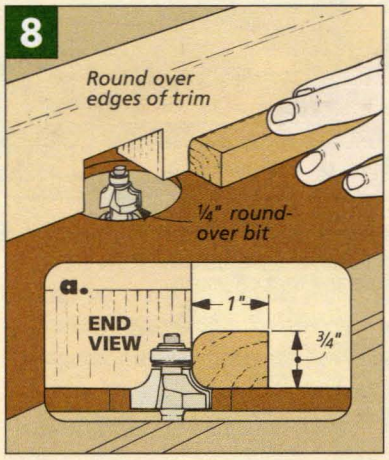

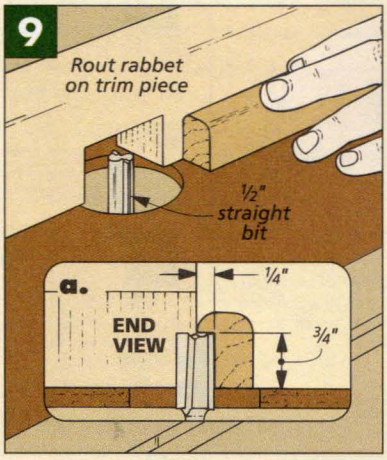

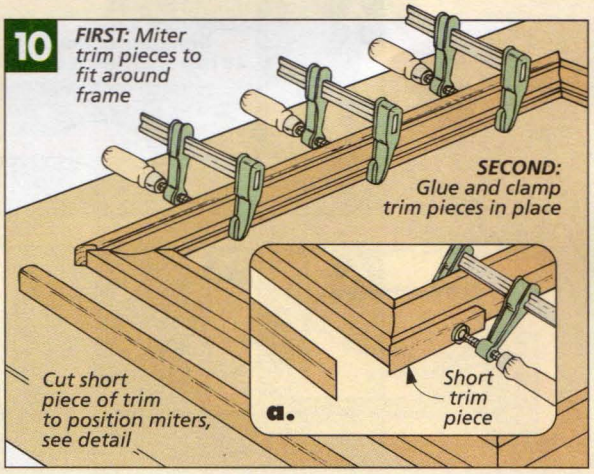

Classic Walnut Frame

After making the first picture frame, I wanted to try something a little more challenging. So I began experimenting a bit by combining a couple of different coves to create a more complex profile as shown in the molding profile drawing below.

But that's not all. One of the coves used on this frame is also *asymmetrical* — it's deeper at one side than the other. This type of cove is cut by passing the workpiece over the blade at an angle *and* tilting the blade.

COVES. This frame starts out similar to the previous frame. As you can see in Figs. 1 and 1a, I cut a shallow cove down the center (roughly) of a 3/4"-thick, 4 1/2"-wide blank. Then to make it easier to positon the second cove, trim one side of the blank, leaving a 1"-wide shoulder (Fig. 2).

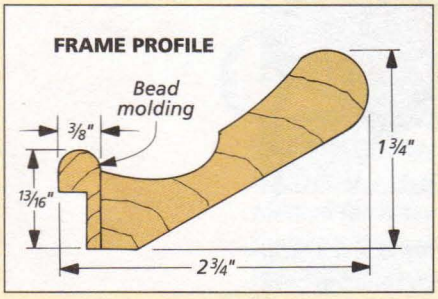

Taking a look at Fig. 3, you'll see that the second cove is cut by setting the fences at 15° and tilting the blade 30°. But you'll have to pay more attention when positioning the fences for this cove. In order to get the second cove to line up with the first cove, you'll need to position the first fence 1" away from the leading edge of the blade, as shown in Fig. 3a.

After cutting the second cove, you can trim the other edge of the blank, leaving a 3/8"-wide shoulder (Fig. 4).

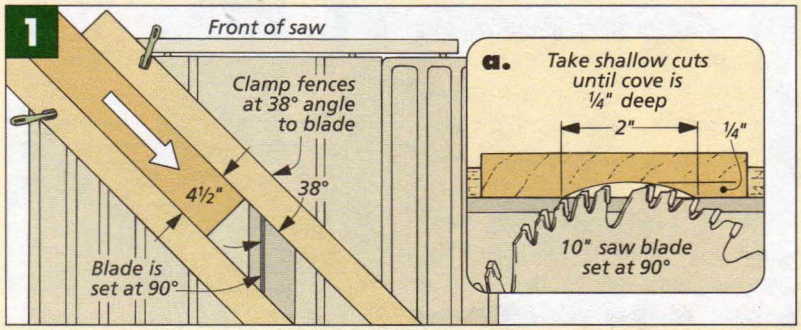

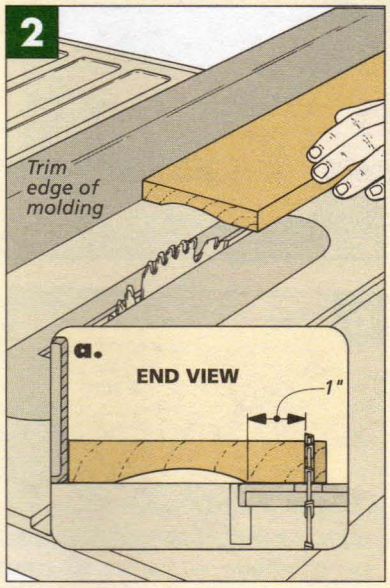

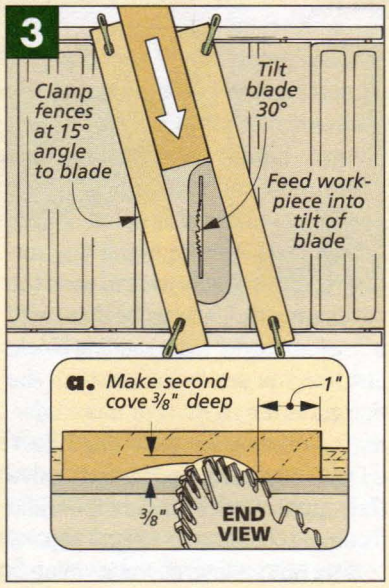

To create the rounded edge of the molding, I used a 3/8" round-over bit on the router table, just like you see in Fig. 5. Rout a roundover on one side of the piece, then flip the blank over and rout along the other side to complete the full roundover.

In order to create a flat spot for the frame to rest against the wall, the next step is to rip a couple of bevels along the square (unrounded) edge of the molding. These bevels meet at a 90° angle, as shown in Figs. 6 and 7. Once these bevels are cut, the workpieces can be sanded smooth.

BEAD MOLDING. After sanding everything smooth, you can start making the bead molding that will get applied to the inside edge of the frame. A rabbet on the edge of this molding will hold the picture when the frame is assembled.

Because it would be difficult (as well as unsafe) to cut a rabbet on such

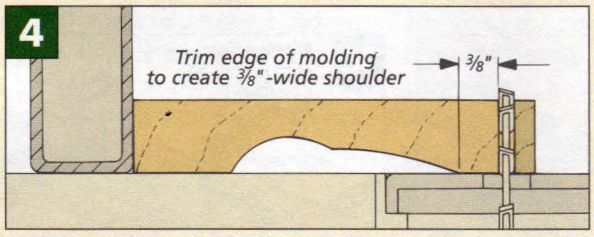

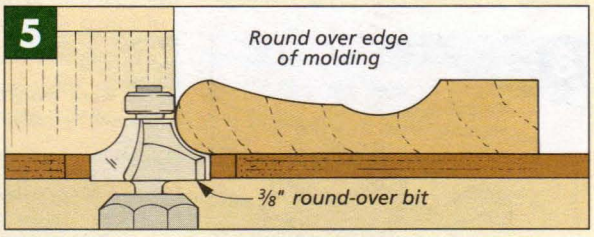

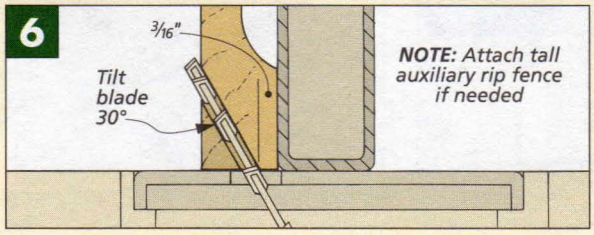

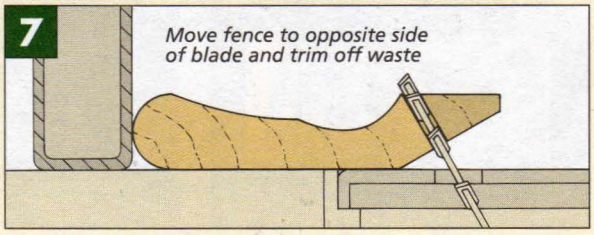

a small piece of molding, I like to use a little trick. I start with an extra-wide blank. First, roundovers are routed on all four edges of the blank, as shown in Fig. 8. Then in Fig. 9, a dado blade is being used to cut a couple of grooves 5/16" from each edge of the blank. Once this is done, all you have to do is flip the blank over, switch to a regular saw blade, and rip the bead molding free (Fig. 9a).

When it came to gluing the frame pieces and the bead molding together, I ran into a snag. Because of the profile of the frame molding, there isn't a convenient place to clamp the bead molding to the frame pieces. So I had to make a special clamping jig to hold the pieces together. You can see this jig in Fig. 10.

COMPOUND MITERS. After the bead is attached to the molding, you're ready to miter the frame pieces to length. This frame is a little bit different than the previous one, however. Since the molding doesn't sit flat, you'll have to make a sled to hold it in position while cutting the miters. This is shown in Fig. 11 and in the box below.

ASSEMBLY. With all the compound miters cut, assembly of the frame is the next step. Because of the angles and the profile of this frame, clamping it up poses a small challenge. A band clamp alone tends to pull the miter joints apart as it's tightened. To support the corners and keep the joints tightly closed, I made a simple clamping jig from some scrap wood and a few dowels. You can see this jig being used in Fig. 12 and read more about how to make it on page 16.

Once the glue has dried, you can drill some small pilot holes and reinforce each corner of the frame with a couple of 4d finish nails (Fig. 12a). Just be careful to position the nails so they don't "blow out" of the front or back face of the frame.

After applying a finish to the frame, just fill the nail holes in the corners of the frame with a little wood filler (or wood putty).

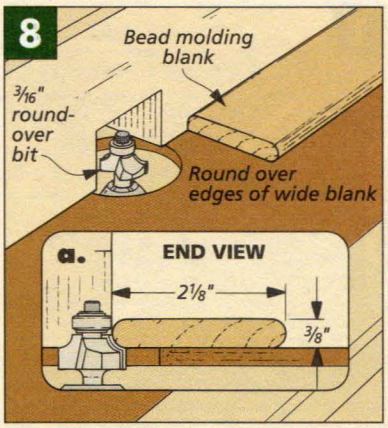

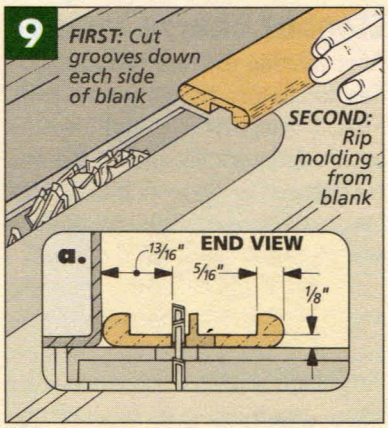

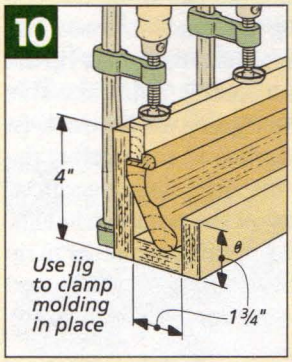

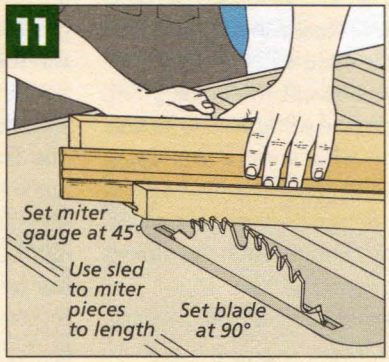

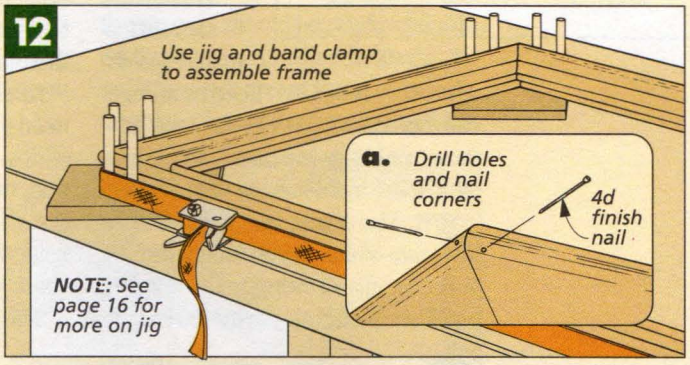

COMPOUND MITERS ON A TABLE SAW

Since the picture frame moldings on this page and the next don't sit flat, fitting the pieces together means cutting a *compound* miter.

An easy way to cut a compound miter on a table saw is to leave the blade at 90° and tilt the workpiece. The trick is to hold the workpiece at the same angle that it will be when the frame is assembled.

To do this, I use a simple sled made out of plywood and hardboard, as you can see in the drawing at right. The sled attaches to my miter gauge. A lip on the sled helps to hold the workpiece in the proper position while cutting the miters.

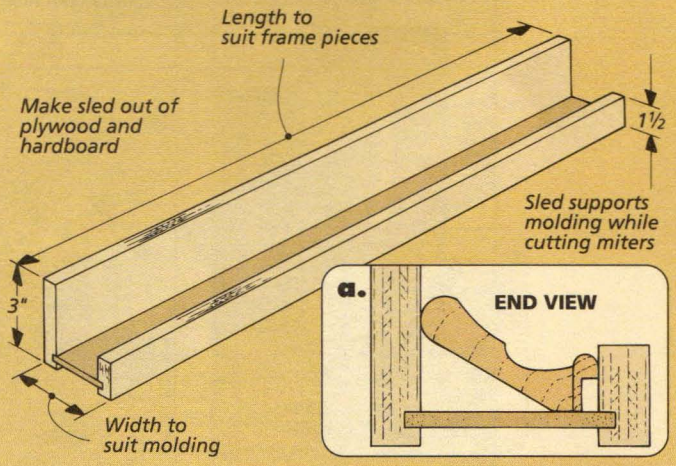

Elegant Cherry Frame

After making the first two frames, I decided to turn things around a bit. First, I designed this frame so the outer edge rests flat against the wall (as opposed to the inner edge). This makes the center of the frame look like it's rising out from the wall.

Second, I didn't build this frame for a picture. Instead, I used it to frame a mirror. Now, this doesn't make any difference in the construction of the frame. But it just goes to show that you don't have to be framing art work to try your hand at these frames.

MIRROR. Instead of special ordering the mirror from a glass shop, I purchased the beveled mirror for this frame right off the shelf of a local home improvement center for about $30. Then I built the frame to fit around it.

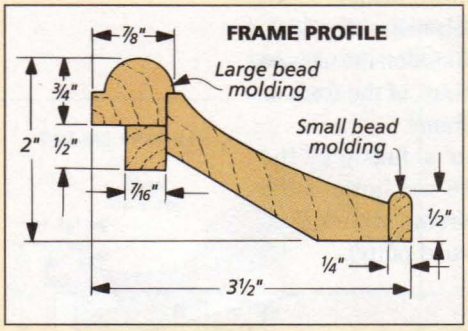

This frame is also different for another reason. It has two bead moldings. But before we get too far into how those moldings are made, let's take a look at the main section of the frame.

COVE. The frame has a wide, shallow cove which, if you look carefully at the profile drawing in the margin, you'll see is slightly asymmetrical. So you'll have to tilt the blade as well as set up angled fences to guide the workpiece. You can see how this is done in Fig. 1. The fences are positioned at a 45° angle to the blade, and the blade is tilted 45°.

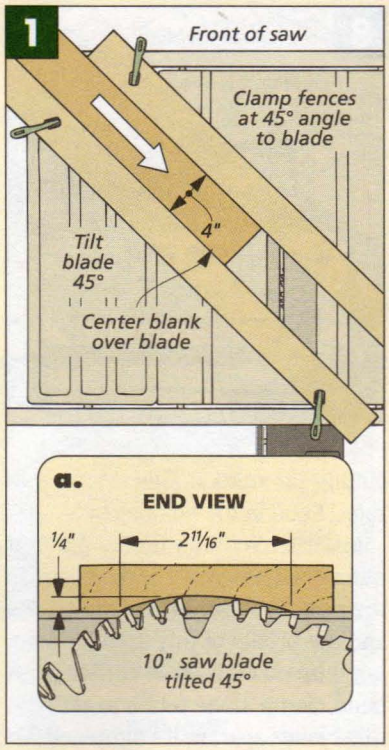

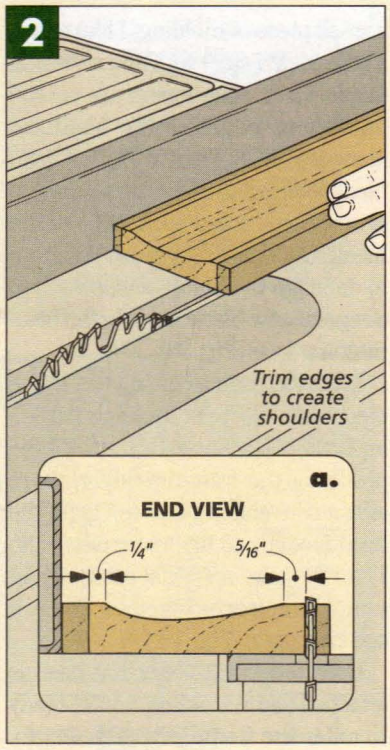

After you've cut the cove, you'll need to trim the workpiece to its final width. But what's more important than the overall width is the width of the shoulders on either side of the cove. They should match the dimensions shown in Fig. 2a.

The last step to complete the cove molding is to rip bevels along all four edges. These bevels aren't difficult to make — it's simply a matter of tilting the saw blade 30° and positioning the fence for each cut. But the important thing is to rip the bevels in a specific sequence. This way, the workpiece will have at least one flat surface to rest against the fence (or the table) during each cut. You can follow this sequence in Figs. 3 through 6. Note that in order to rip the last bevel in Fig. 6, you'll need to move your rip fence over to the

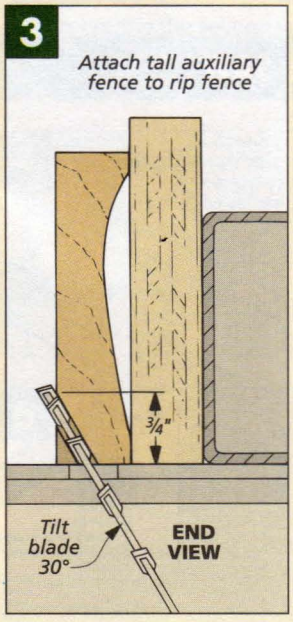

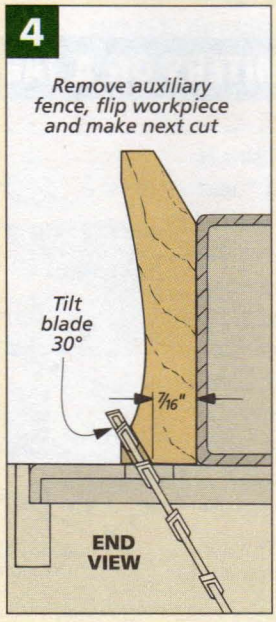

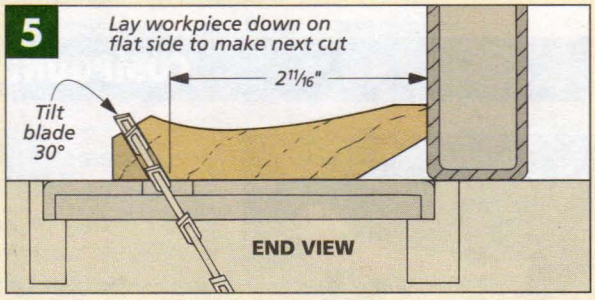

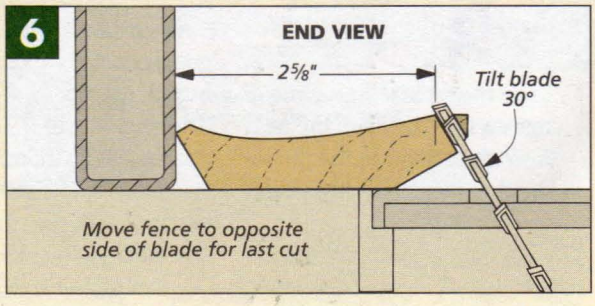

opposite side of the saw blade.

BEAD MOLDING. With all the bevels ripped and the pieces sanded, the next step is to create the large bead molding that is attached to the inside edge of the frame. You'll need to step over to the router table to make this piece. Look at Fig. 7 and see how the bead is created with a round-over bit, leaving a slight shoulder on one edge. Then notice how a rabbet is routed along the opposite edge in Fig. 8. This allows the bead molding to "seat" against the inside edge of the frame.

After the large bead molding is completed, it can be glued to the frame pieces. Because the rabbet in the bead molding helps to position it on the edge of the frame, all you have to do is find a way to hold it in place while the glue dries. I used rubber bands to do this. And to concentrate the clamping pressure where I wanted it, I inserted a length of 1"-dia. dowel underneath the rubber bands, just like you see in Fig. 9.

At this point, you're probably anxious to miter the frame pieces, but there's still one more step to complete. To create a rabbet on the inside of the frame to hold the mirror, I added a spacer. This is just a small, rectangular piece that is glued to the inside corner of the bead molding and edge of the frame, as you can see in Figs. 10 and 10a.

MITER FRAME. Once the glue is dry, you can miter the frame pieces to length. Here again, you'll need to construct a sled to hold the frame molding while cutting the compound miters (Fig. 11).

After you've carefully mitered the frame pieces, glue them together using a band clamp and a simple clamping jig, just like you see in Fig. 12. (For more details on the clamping jig, see page 16.) Once the glue is dry, the corners should be reinforced with 4d finish nails. I drilled holes for the nails first to prevent them from splitting the wood of the frame (Fig. 12a).

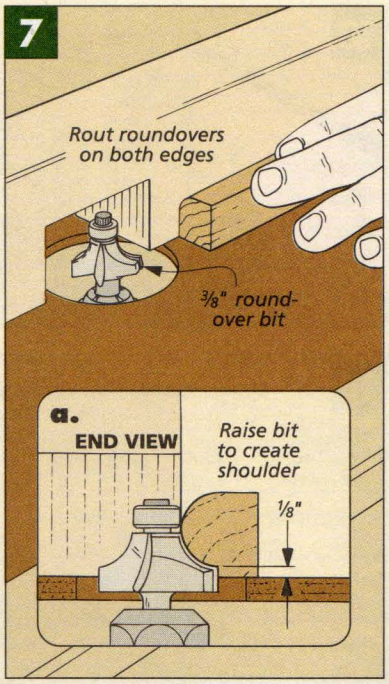

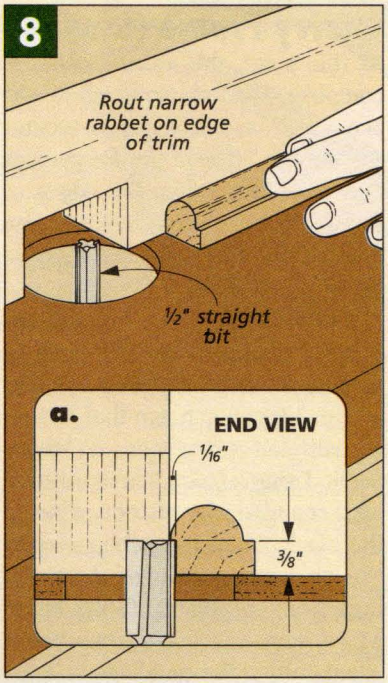

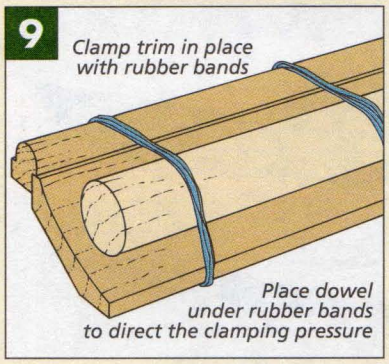

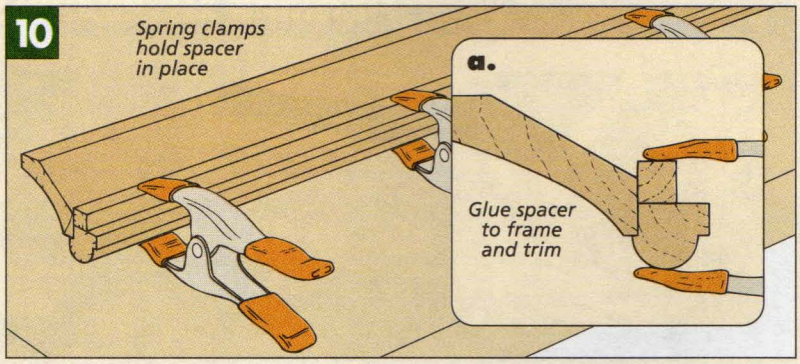

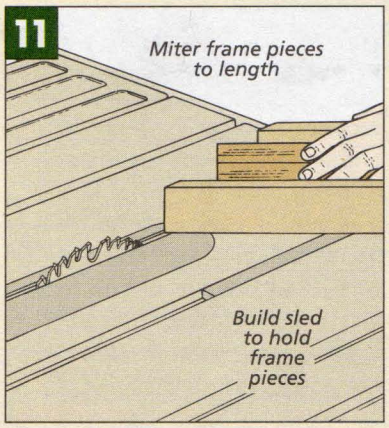

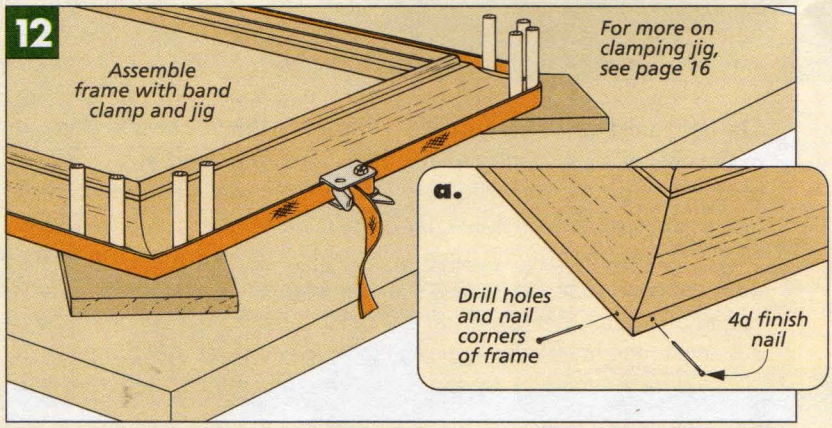

Cherry Frame (cont.)

At this point, the frame is almost complete. The only thing left to add is a small bead molding all around the outside edge of the frame. Not only does this soften the edges of the frame, but it also covers up the finish nails that you used to reinforce the corners.

BEAD MOLDING. There's nothing out of the ordinary when it comes to making the bead molding. Looking at Fig. 13, you can see that I started with an extra-wide, 1/4"-thick blank. Using a 1/8"-radius round-over bit, I rounded over all four edges of the blank. Then I switched over to the table saw and ripped the moldings from the blank. (Shop Note: Make sure and use a push block when cutting the moldings.)

The bead molding is mitered to length to fit around the frame. In order to help fit the molding, I mitered the end of a scrap piece of bead molding and clamped it to one corner of the frame. This gave me something to butt the molding up against as I fitted each piece. (See Fig. 10a on page 19 for an example of what I'm talking about.)

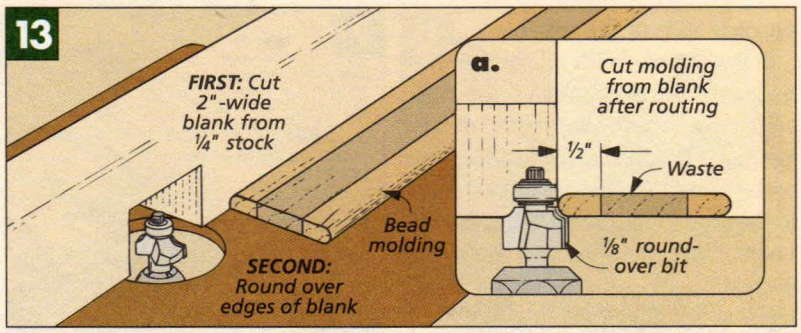

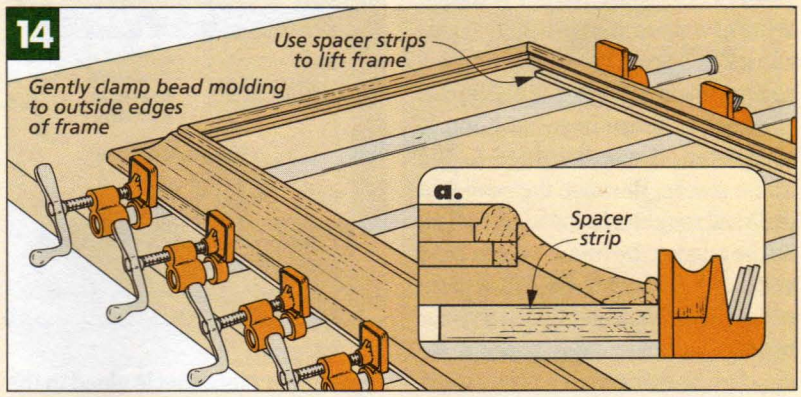

ASSEMBLY. After the bead moldings are mitered to length, they can be glued to the outside edges of the frame. To hold them in place, I simply clamped across the frame, as shown in Fig. 14. But in order to center the clamping pressure directly on the bead molding, I placed 3/4"-thick spacer strips underneath the frame to elevate it.

Once the glue was dry, I sprayed on a few coats of lacquer (Deft). But you might want to try an alternative finish like the ones in the box below.

FINISHING ALTERNATIVES

Contrasting colors *create a subtle look. For the cherry frame above, the trim moldings are finished natural while the main portion of the frame is stained.*

Painted trim *gives the frame a two-tone effect. In this frame the visible portions of the trim were painted black before they were applied.*

The bead moldings that are applied to the cherry frame shown above offer a great opportunity to customize the look of your frame. By simply staining or painting them a different color than the main portion of the frame, you can achieve a dramatic and interesting effect.

But if you're going to try something like this, it's best to plan out the look you want at the beginning. This way, you can paint or stain the visible portions of the trim before applying them to the main portion of the frame. (You'll need to mask off the glue surfaces before you paint the trim pieces.)

One other thing. Whether you use paint, stain, or simply a clear, natural finish, you might want to try using a spray type of finish. Brushing or wiping on an even coat of finish in all the corners and crevices of the frame can be a challenge. Spray finishes (like Deft or spray paint) make it a lot easier to apply even coats.

MOUNTING & HANGING

Before you build your frame, it's a good idea to get your print or artwork matted. This will make it easier when it comes to mitering the frame pieces to length (see box below). For the prints in these frames, I sandwiched the print between a piece of mat board (with a "window" cut out of the center) and a piece of "foam core." Foam core is a polystyrene backing material that cushions the artwork and helps protect it from damage. I purchased both of these from a local frame shop. (Order the mat and foam core cut to size — it's not worth risking the attempt to cut them on your own.)

MOUNTING THE PRINT. After you've built your frame, you can take it to a frame shop and have your print professionally mounted. Or you can do what I did and simply purchase the materials and do the mounting yourself. Although professional framers use special tools and fasteners to secure the glass and artwork into a frame, you can do the same thing with some simple turnbuttons, just like the ones shown in the drawing below.

DUST COVER. To protect the print, it's a good idea to add a dust cover to the back of the frame. This is just a piece of brown kraft paper that is attached to the frame with double-sided tape. Once this is in place, I like to add rubber bumpers to prevent the frame from damaging the wall surface.

HANGING THE PICTURE. When it comes to hanging a picture (or any other item) it's important to make sure the hardware you're using is strong enough to support the weight of the object you're hanging. Since these frames are fairly heavy, I used heavy-duty picture wire and *two* 50 lb. picture hooks for each frame. (You should be able to find these items at most hardware stores.)

The picture wire is secured to the frame with a couple of D-rings. These can be seen in Fig. 1. In this figure, you can also see the special knot that is used to fasten the wire to the ring. After pulling the knot tight, wrap the end of the wire around itself to prevent it from unraveling, just like you see in Fig. 2. Then, to prevent the wire from scratching or marking up the wall, I like to wrap the ends with floral stem wrap (available at craft stores) or masking tape (Fig. 3).

TWO-POINT HANGING SYSTEM. To hang the picture, I like to use two picture hooks. This does a couple of things. First, it distributes the load so all the weight isn't on a single hook. And second, it makes it a lot easier to level the picture once it's on the wall. Just install the hooks about 6" apart on the wall. If you have plastered walls, it's best if one of the hooks is driven into a stud. But this isn't necessary if your walls are made of drywall.

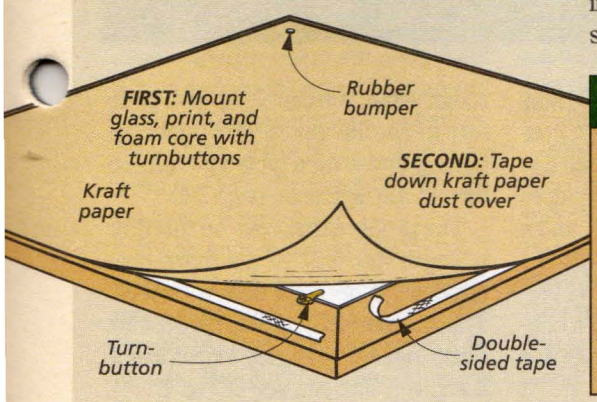

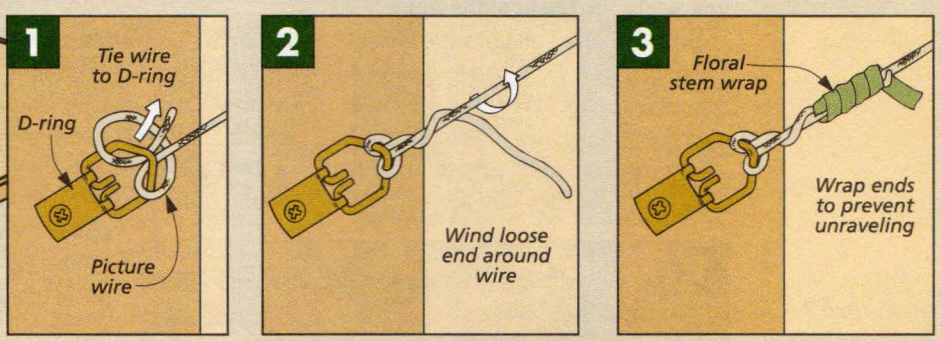

CUTTING TO SIZE

When I'm making a frame for a door, I usually build the frame first and then cut the panel or glass to fit the opening. But when it comes to framing artwork, I'd strongly suggest that you have the item on hand before mitering your frame pieces. This way, you can use the object as a gauge for marking your frame pieces to length, as you see in Fig. 1.

There's just a couple of things to be aware of here. First, I like to allow for a 1/16" clearance-gap between the artwork and the frame. This way, even if your glass or mat board is cut a little oversize it should still fit in the opening.

Second, remember that what you're trying to do is match the artwork with the size of the rabbeted opening at the back of the frame. So when marking the frame pieces before cutting them to length, make sure and place your layout marks on the *inside* edge of the rabbet. Not on the edge of the frame. If you don't, you'll end up with a frame that is too large for your artwork.

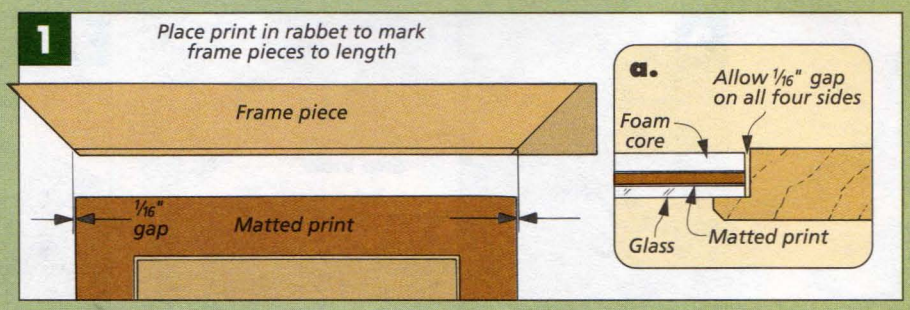

SERVING TRAY

The sides of this charming serving tray are hollowed out on both faces. This creates a unique look and makes the tray easier to pick up.

When I build a project, most of the time I start out with a pretty good idea of *what* I'm going to make. Then I just have to figure out *how* I'm going to make it. But in the case of this serving tray, it was just the opposite.

You see, I enjoyed cutting the coves for the picture frames on page 18 so much that I began trying to come up with another project where this technique could be used. (After all, not everyone has a picture lying around their house waiting to be framed.) The result is the small serving tray you see in the photo at the right.

But even after I hit upon the idea of building a tray, I still had to do some "experimenting." What I wanted was a profile that not only looked nice but also provided a good grip to make it easy to lift the tray. The answer was to cut a cove on *both* faces of the four sides of the tray. This creates a concave profile with an easy-to-grab lip.

BLANKS. The tray consists of five pieces — a front and back, two sides, and a plywood bottom. Starting with 5/4 stock ($1\frac{1}{16}$" thick), rip a couple of blanks to a width of 4". (I made the blanks about 38" long. This allows you to cut one side and one front/back from each blank.)

COVES. With the blanks cut to rough width, you can set up your table saw to cut the coves. (For more on cutting coves on a table saw, please turn to the article on page 28.)

The profile of the cove on this tray is *asymmetrical* — it's more pronounced at one end than the other. This means you'll have to tilt the saw blade *and* set up angled fences to cut the coves, like you see in Fig. 1.

And because the profile isn't symmetrical, you'll need to make sure that you flip the workpiece end for end between each pass rather than just turning it over. This keeps the deeper end of the coves along the same edge of the workpiece. (You can see what I'm talking about in Fig. 1a.)

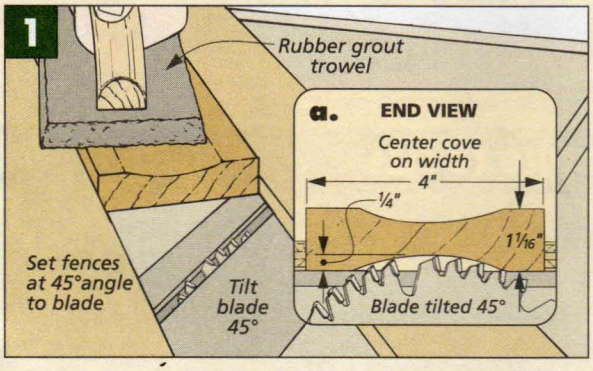

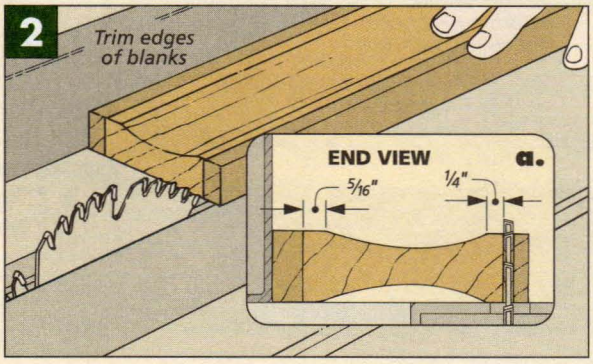

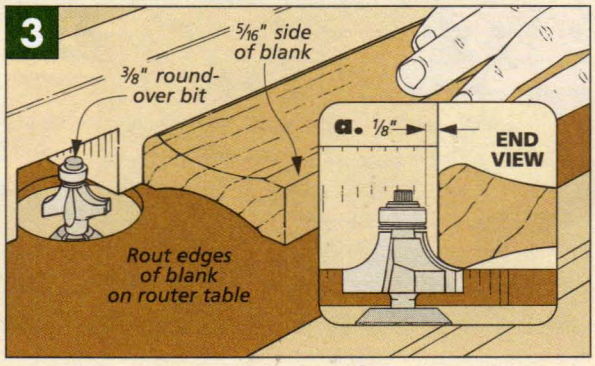

TRIM BLANKS. Once the coves are done, you can trim the blanks to width. The exact width isn't really too important. What you need to be concerned with is the width of the flat spots on either side of the cove. These dimensions are shown in Fig. 2a.

If you look carefully at the photo on the opposite page, you'll notice that the edges of the lip of the tray are slightly rounded, resulting in a more comfortable grip when you pick up the tray. This rounded profile is created by easing the edges using a round-over bit. Since only a portion of the cutting edge of the bit is used, you'll need to do this on a router table, using a fence as shown in Fig. 3.

BEVELS. In order to create a flat spot for the four sides of the tray to sit upon, a couple of bevels are ripped along the edge opposite the roundovers. These are cut with the blade tilted at a 45° angle, just like you see in Fig. 4.

GROOVE. Once you've finished ripping the bevels, you can set up your saw to cut a groove along each blank to hold a plywood bottom. This groove is cut by making a couple of passes. (The width of the groove should be sized to fit the thickness of the plywood you'll be using.)

If you take a look at Fig. 5, you'll see that you have to hold the workpiece at an angle in order to cut the groove. At first, this may seem a little odd. But in reality, the flat spots created by the bevels you ripped earlier provide plenty of support for the workpiece and allow it to ride against the fence and the table.

The table saw did a pretty good job of cutting the coves, but it left the surfaces a little rough. To smooth them out, you'll need to do some hand sanding. And to make the job easier, it helps to fashion a custom-shaped sanding block out of a piece of rigid foam insulation. If you turn to page 17, I'll show you how to make one.

COMPOUND MITERS. Now you've reached the point where you can miter the pieces to length. Because of the profile of these moldings, you'll need to cut *compound* miters. This isn't as difficult as it sounds. You'll just need to make a simple jig similar to the one shown in Fig. 6 and in the box on page 21. This jig is just an H-shaped sled that attaches to the miter gauge and supports the workpieces.

Measuring from the *inside* edge of the pieces, I mitered the front and back pieces to a length of 14½" and the sides to a length of 11". But the exact length isn't really all that critical. What's more important is that each pair (front and back and the two sides) end up the same length.

Once you've mitered all the pieces, you can dry assemble the tray and measure the opening for the plywood bottom as shown in Fig. 7. Just remember to add enough for the depth of the grooves. Then you can cut the bottom to size and glue up the pieces around the bottom.

To hold all the miter joints together while the glue dried, I used some simple clamping jigs, which you can see in the photo below and on page 16. Then after the glue is dry, you can reinforce each corner by cross-nailing a couple of 4d finish nails. W

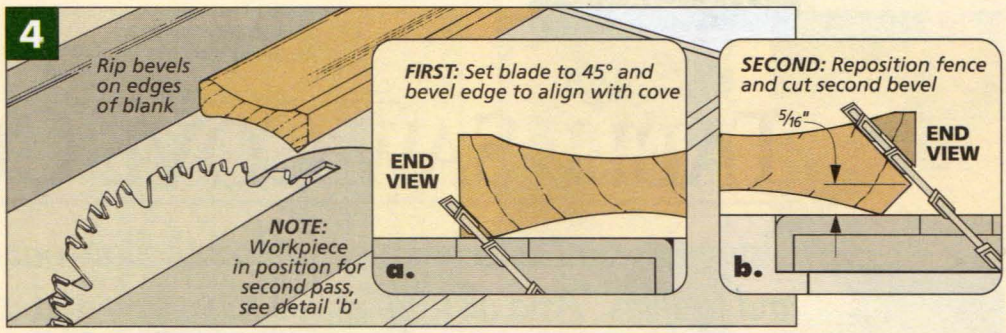

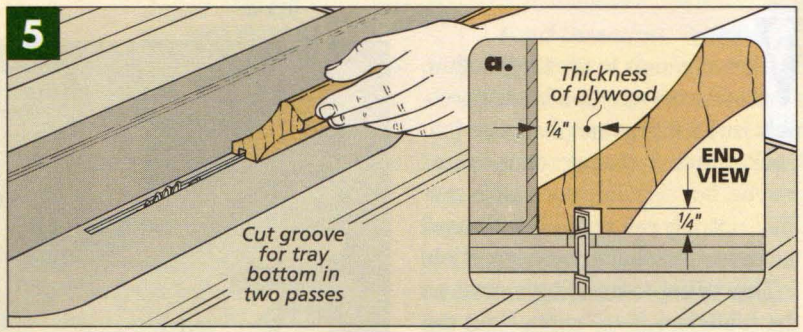

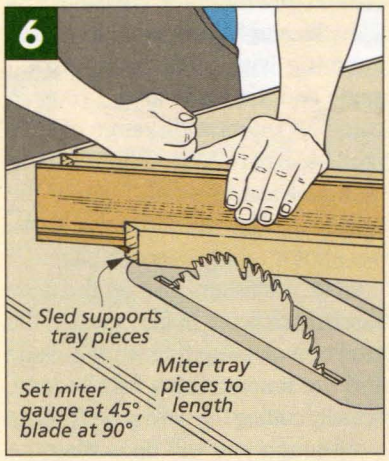

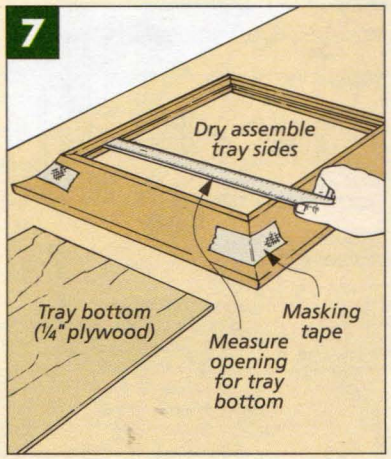

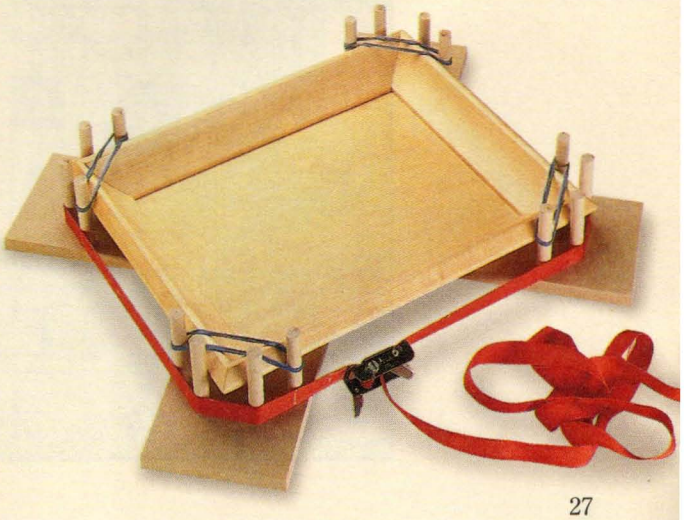

A band clamp and a simple jig make it easy to clamp up the tray. For more on the jig, please turn to page 16.

TABLE SAW COVE CUTTING

Using this simple technique, you can hollow out coves of all different sizes and profiles. And all it takes is a table saw and a sharp saw blade.

When it comes to creating hollow, concave curves, the table saw probably isn't the first tool that pops into your mind. A shaper, or a router maybe, but certainly not a table saw. Well, not only can a table saw be used to make coves, but it does a great job.

The secret to creating a cove on the table saw is to "scoop" out the wood by running the workpiece over the blade at an angle. I know this seems a bit odd and perhaps a little scary, but there's nothing to it. That's because you'll be removing the material in very light passes. And you'll have a couple of fences clamped to your table saw to guide the workpiece along the way.

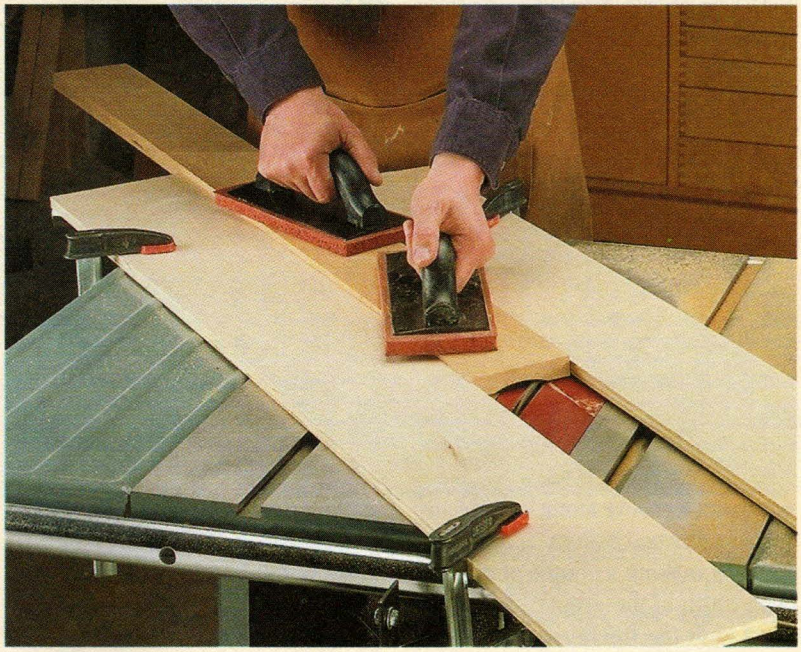

One of the nice things about cutting coves on a table saw is that you can create something unique and elegant with a common tool. For making small runs of molding (like for a picture frame) cove cutting on the table saw is really the way to go. And it's surprisingly simple.

ANGLE OF APPROACH. The size and shape of the cove you make is controlled by the approach angle (the angle between the blade and the fences), as shown in the drawing below. A steep angle of approach results in a narrow, elliptical-looking cove. As the approach angle increases, the cove gets wider and becomes rounder. By experimenting with different approach angles, you can create coves of varying sizes.

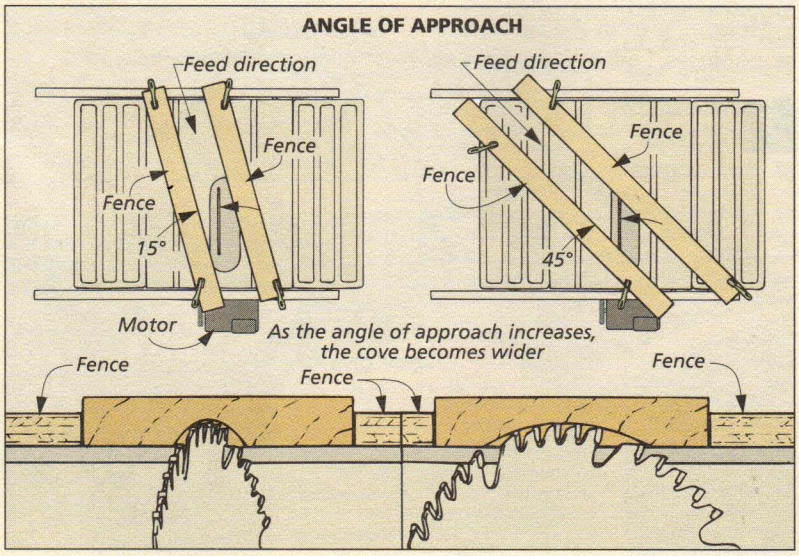

ASYMMETRICAL COVES. In addition to changing the approach angle, you can also affect the shape of a cove by tilting the blade. This creates an asymmetrical (skewed) cove, like the one shown in the drawing at the top of the opposite page. The more the blade is tilted, the more the cove looks as if it's "leaning" to one side. By experimenting with both the approach angle and the blade angle, you can come up with a wide range of cove profiles. Safety Note: When cutting asymmetrical coves, always feed the workpiece into the tilt of the blade, see photos on the opposite page.

SET-UP. Cutting a cove on the table saw isn't difficult. In fact, most of the effort involves setting up the blade and the fences. Once this is done, actually cutting the cove is pretty easy.

Although you will be cutting the

cove in stages, to set up the fences I like to initially raise the blade to the desired height (depth) of the finished cove. This makes it easier to determine the angle to set your fences. (If you're cutting an asymmetrical cove, you'll need to tilt the blade first.)

FENCES. With the blade raised to the correct height, the next step is to clamp a pair of fences to the top of the saw. The fences can be made from any flat stock. (I like to use plywood.) The important thing is that they have accurate, straight edges. And since you'll be using push blocks to feed the workpiece over the blade, it helps if the fences are thinner than your workpiece. This way the push blocks won't hang up on the fences.

The first step in positioning the fences is to determine their angle. For the picture frames and the serving tray on pages 18-27, we've given you the fence angle. So you can simply use a protractor or even your miter gauge to position the fences.

If you're experimenting with different cove profiles, you'll need to determine the fence angle on your own. But it's hard to "see" what the cove is going to look like. So a trick I like to use is to draw the profile of the cove on the end of my workpiece. Then I place the workpiece behind the blade and kneel down so I can sight down the blade, just like in Fig. 1. Try positioning the workpiece at different angles until the profile of the blade matches the profile of the cove drawn on the end of the workpiece. Once it does, you can position your fences to match this angle.

This is a good way to test and see if it's possible to cut the cove you want. Keep in mind that not every shape is possible. There are limitations based upon the diameter of the blade.

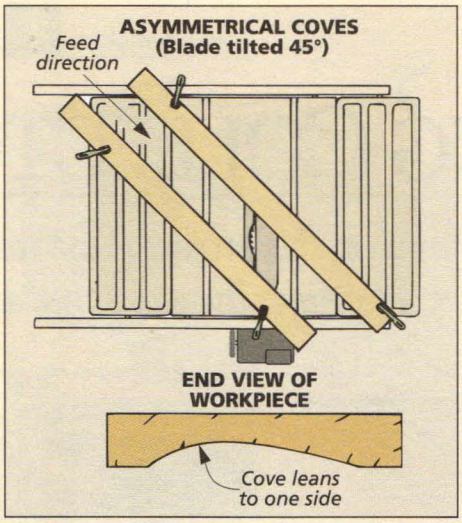

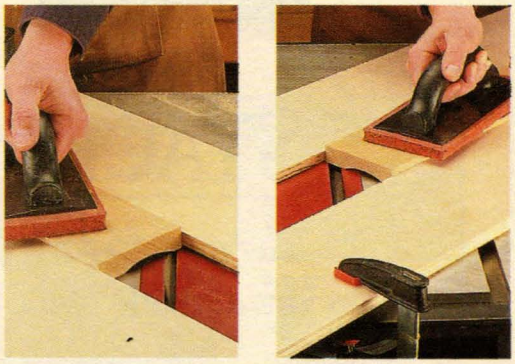

***Feed Direction**. Whether your saw blade tilts to the right or the left, make sure you always feed the workpiece into the tilt of the blade when cutting asymmetrical coves. And for safety's sake, be sure to always use push blocks.*

To clamp the fences in place, start by getting one fence (usually the one in front of the blade) positioned and clamped down. Then place your workpiece against this fence. Now just butt the second fence against the other edge of the workpiece and clamp it down as well. Lower the saw blade and check to see that the workpiece slides smoothly between the fences without binding. However, you don't want any side-to-side play.

CUTTING THE COVE. The most important thing to keep in mind when it comes to actually cutting the cove is that it has to be done gradually, in a series of passes. Since you're feeding the workpiece into the blade at an angle, the teeth are only cutting on one side.

As you can see in Fig. 2, I like to start with the blade raised only about 1/8" for the first pass. Then raise the blade no more than 1/16" at a time for each successive pass.

There are a few things to be aware of as you are feeding the board over the saw blade. First, you want to maintain consistent downward pressure on the workpiece to keep it flat against the table. This is where the push blocks come in. I like to use a pair of jointer-style push blocks (or a couple of rubber-faced grout floats).

Second, you want to feed the workpiece at an even pace. Slow and steady. Try not to stop along the way. If the saw blade or the motor seems to be bogging down, let up on the feed rate. A slower feed rate also has the advantage of giving you a smoother cut, requiring less sanding later.

Finally, make sure that the blank is facing in the same direction for each pass. It's easy to get the workpiece flipped around when you turn it over to examine your progress. To help keep things straight, I like to draw a directional arrow on the workpiece.

Once you've finished cutting the cove, you'll probably notice tiny ridges or saw marks left behind by the blade. This is normal. You can easily remove them with a curved scraper or by sanding, see page 17. W

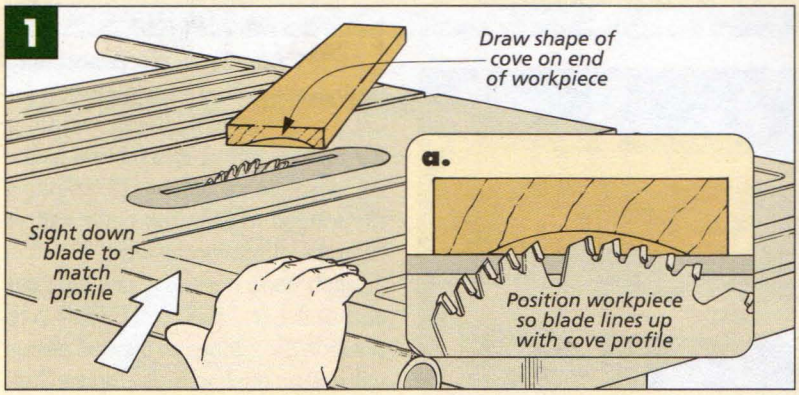

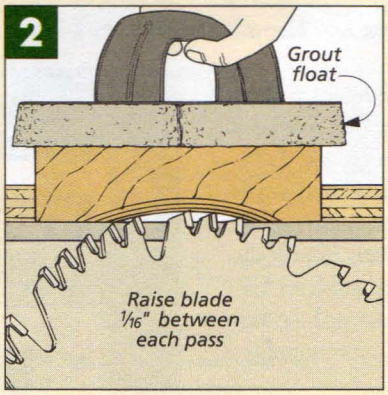

STACKING COLLECTOR CASES

The most striking feature on this project is the raised fields. These fields are also one of the keys to getting the cases to stack on top of each other.

Everyone around here loves these small cases — they're a great place to display small "curiosities" or store CDs. But while I like the *look* of the cases as much as anyone, what I really like is how they *work*. After all, it's easy to see how attractive they are. Just take a look at the photo above. What's not so easy to see is exactly how these cases stack on each other.

It's actually simpler than you might think. The three raised fields on top of each case aren't merely for decoration. The photo below shows how the fields also fit into a matching recess on the bottom of the case that's set on top. These mating parts interlock kind of like *Legos*, the plastic building blocks for children.

This means you can build one or two cases now. Then when there are a few more items to display or a few more CDs in your collection, just build an additional case and stack it on top. It's a flexible system that you can add to easily later on.

This flexibility also applies to the drawers. You can build the cases without drawers *or* with a drawer in every opening *or* with only a few "accent" drawers. It's entirely up to you.

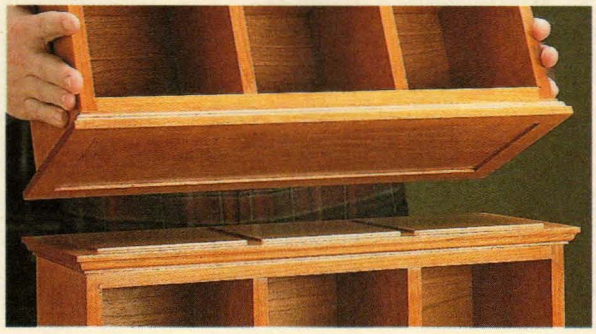

The secret to these stacking cases is a recess routed in the bottom of each. The shoulders of the recess fit over the raised fields on top, "locking" the two cases together.

CASE

The first thing to build is the case. And as you can see in Fig. 1, this case is just an open box with a top and bottom, two ends, and a back.

CUT PIECES TO SIZE. To build the case, I started by cutting the pieces to finished size from ½"-thick stock. The *top (A)* and *bottom (A)* are identical, as are the two *ends (B)*.

DADOES. After these pieces are cut to size, dado and tongue joints can be cut. I've gotten in the habit of cutting the dadoes first (Fig. 2). I find it easier to sneak up on the thickness of the tongue to fit in the dado, rather than the other way around.

Each dado here is a saw kerf cut across the end pieces. The key is to position the dadoes so the end pieces will end up flush with the top and bot-

tom pieces. This means that when you're setting the rip fence to make the cut, the distance to the *outside* of the blade should equal the thickness of the stock, as illustrated in Fig. 2a.

After the dadoes were cut, I worked on the tongues that fit into them. As you can see in Figs. 3 and 3a, this means cutting rabbets on the top and bottom pieces. And to get the fit snug, I like to "sneak up" on the height of the blade, testing the fit of the tongue in the dado after each pass.

BACK. The last case piece to make is a *back (C)*. Here, I wanted a thin back that would look good from both sides (so the case could be set out on a desk). But I couldn't find any 1/8" plywood with two good faces. So as you can see in Fig. 1, I made my own plywood, covering both faces of a piece of tempered hardboard with veneer.

Don't worry. If you can glue two pieces of wood together, you can make this home-made plywood. All you do is glue three oversized pieces together and then trim them to size.

When gluing veneer or laminate to a substrate, I typically use contact cement. It's quick and doesn't require clamps. But these pieces are so small that you can use yellow or hide glue just as easily. You just have to give the glue more time to dry.

However, when using yellow or hide glue, it's a good idea to sandwich the hardboard and veneer between a layer of waxed paper and scrap plywood (or MDF), as shown in the margin photo at right. The plywood helps distribute the clamping pressure, while the waxed paper keeps it from being glued to the veneer.

GROOVE FOR BACK. Now that the back is veneered, you can cut the 1/8"-deep grooves in the top, bottom, and ends that will hold this panel (Fig. 1a). With 1/8" hardboard as the back's core, you know it's going to take more than one pass to get the plywood to fit. (My plywood ended up almost 3/16" thick.) So start with the blade positioned 1/8" from the fence. (You don't want the panel any closer to the back edge of the case than this.) Then after one pass, nudge the fence over and make a second pass. If the back is still a little tight when you test it in one of the grooves, then nudge the fence over a hair more and take another pass.

Before you can assemble this case, there's one more thing to do. The back needs to be cut to final size to fit in the grooves you just cut. But don't try to fit the back tight. Instead, I like to cut the panel shy of the full depth of the grooves. This way, when the case is glued up, I know the back won't be too big, and the corners will pull together nice and tight.

1 exploded view

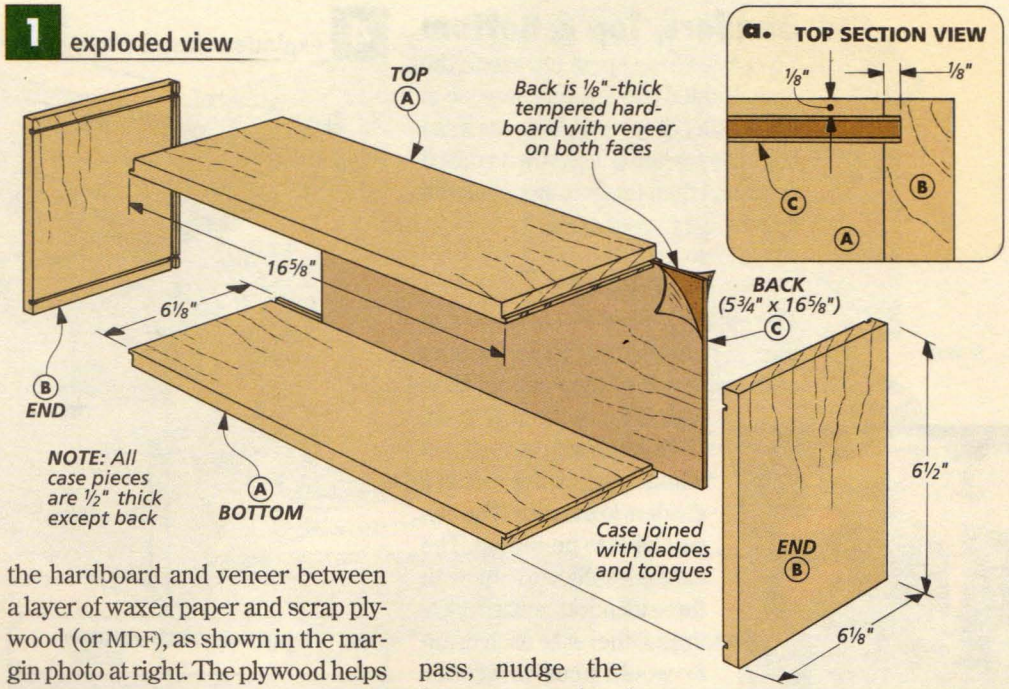

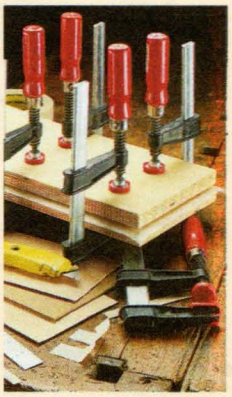

▲ *Scrap plywood and waxed paper sandwich a hardboard panel and two pieces of veneer. It's an easy way to create a small piece of home-made plywood with two good faces.*

2

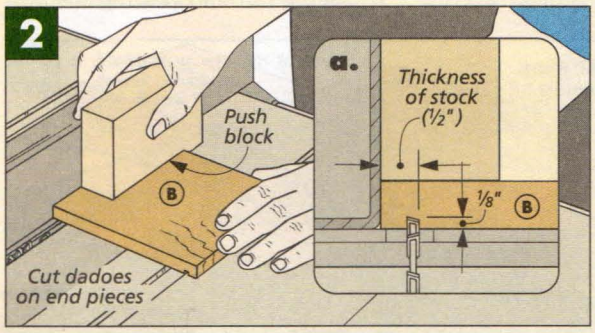

3

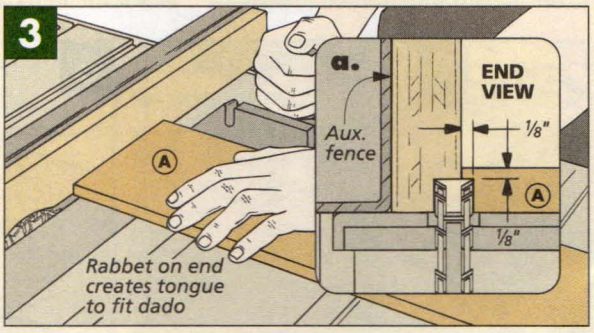

MATERIALS, SUPPLIES & CUTTING DIAGRAM

A	Top/Btm. (2)	1/2 x 6 1/8 - 16 5/8	
B	Ends (2)	1/2 x 6 1/8 - 6 1/2	
C	Back (1)*	1/8 hdbd. - 5 3/4 x 16 5/8	
D	Dividers (2)	1/2 x 5 13/16 - 5 1/2	
E	Top Panel (1)	3/4 x 7 - 18 1/4	
F	Bottom Panel (1)	3/4 x 7 - 18 1/4	
G	Dwr. Fr./Bk. (2)	1/2 x 5 7/16 - 5 1/16	
H	Dwr. Sides (2)	1/2 x 5 7/16 - 5 5/16	
I	Dwr. Btm. (1)	1/8 hdbd. - 4 5/16 x 5 1/16	

- (8) #8 x 1 1/4" Fh Woodscrews
- (1) 1"-dia. Bronze Knob w/Screw

Note: Materials shown for one case and one drawer

*Also Needed: A small piece of tempered hardboard and a 10" x 40" piece of cherry veneer

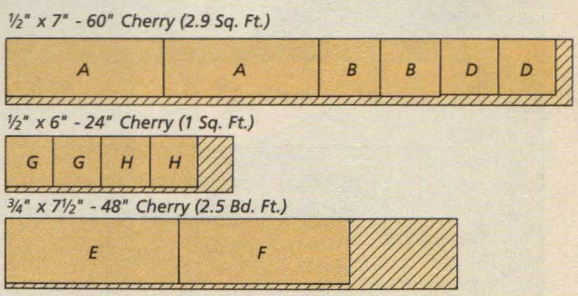

Dividers, Top & Bottom

To create three openings inside the case, I added two dividers, as seen in Fig. 4. After they're in place, work can begin on the top panel with its raised fields and then the bottom panel with its matching recess (Fig. 7).

DIVIDERS

The ½"-thick *dividers (D)* are cut so they fit between the top and bottom of the case and so they end up flush with the case front (Fig. 4).

This is simple enough, but when screwing these dividers to the case (Fig. 4a), you have to be careful. The case should end up with three identical, square openings. Otherwise each drawer would need to be customized for its opening.

SPACERS. To install the dividers, I cut some scrap spacers sized to match the openings, as you can see in the margin photo. (Mine were 5⅛" wide.)

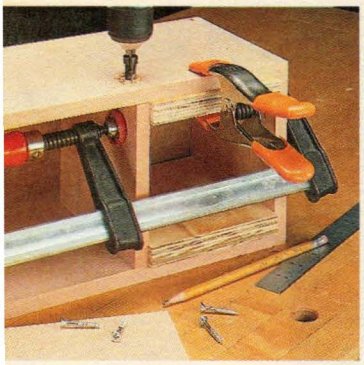

▲ *Scrap spacers keep the dividers positioned correctly while they're being screwed inside the case.*

TOP

Now that the dividers are in place, all that's left is to add the top and bottom panels to the case.

I decided to work on the *top panel (E)* first (Fig. 4). After cutting it to size, there are really just two things to do — both with the router. First, a Roman ogee profile is routed around the edges. Then the three raised fields can be created on the top face.

ROMAN OGEE. The Roman ogee profile is one of those little details that makes a big impact. When routing it (Fig. 4b), I'd suggest starting with the *ends* of the pieces. Routing across the grain almost always results in chipout. But if the ends are routed first, the chipout will be "cleaned up" as the profile is routed on the long edges.

RAISED FIELDS. Next, the raised fields can be routed on top. These are created by shallow dadoes and rabbets, and to make them as clean and flat as possible, I created them with a ½"-dia. straight bit on the router table.

As you can see in Fig. 5, I started by laying out and routing the two

4 exploded view

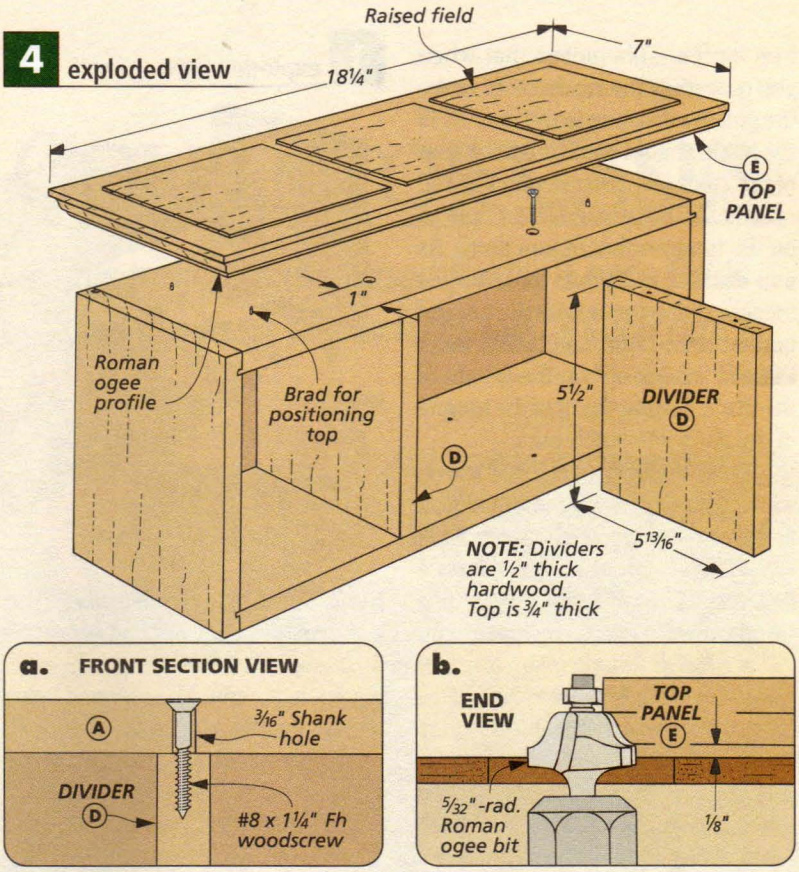

5

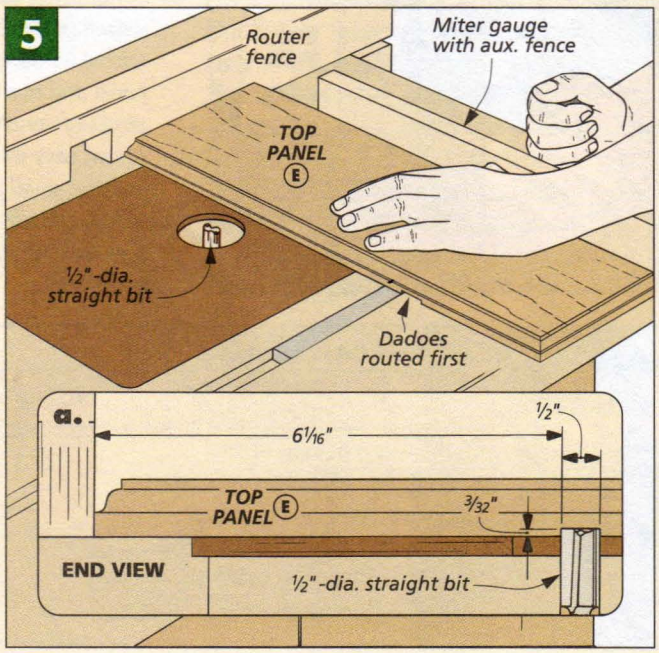

6

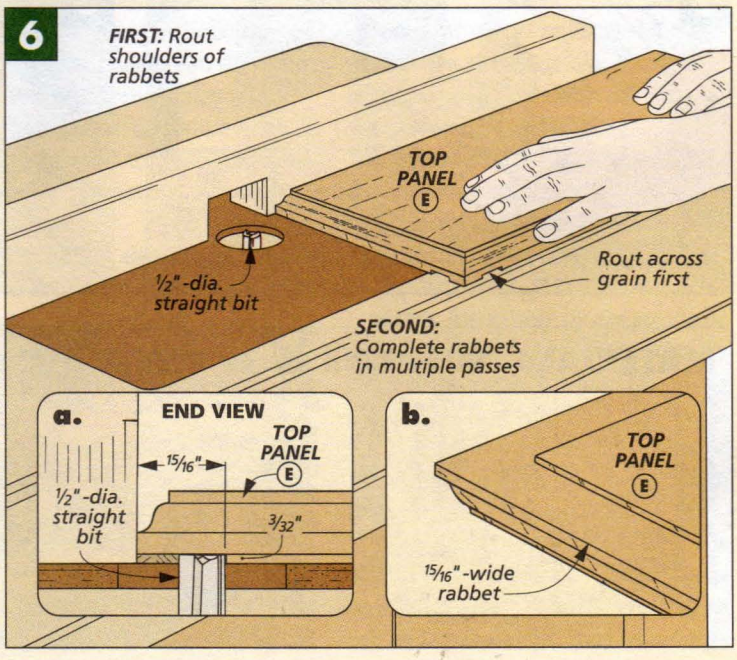

dadoes near the middle of the panel, using the fence as a stop and the miter gauge to guide the piece.

Next, Fig. 6b shows the 15/16"-wide rabbet routed around the top. I started by defining the shoulder of this rabbet, routing the first pass with the fence 15/16" from the *far* edge of the bit (Fig. 6a). Then I took two more light passes (to minimize chipout) until all the waste was removed.

GLUE TO CASE. Now that the raised fields are cut, the top can be glued to the case. The problem is the panel will want to slide around once the glue and clamps are applied.

So before applying any glue, I drove small brads into the case and snipped the heads off, as you can see in Fig. 4. Now carefully center the top over the case and press it onto the brads. Double check that it's positioned correctly; then glue the top in place.

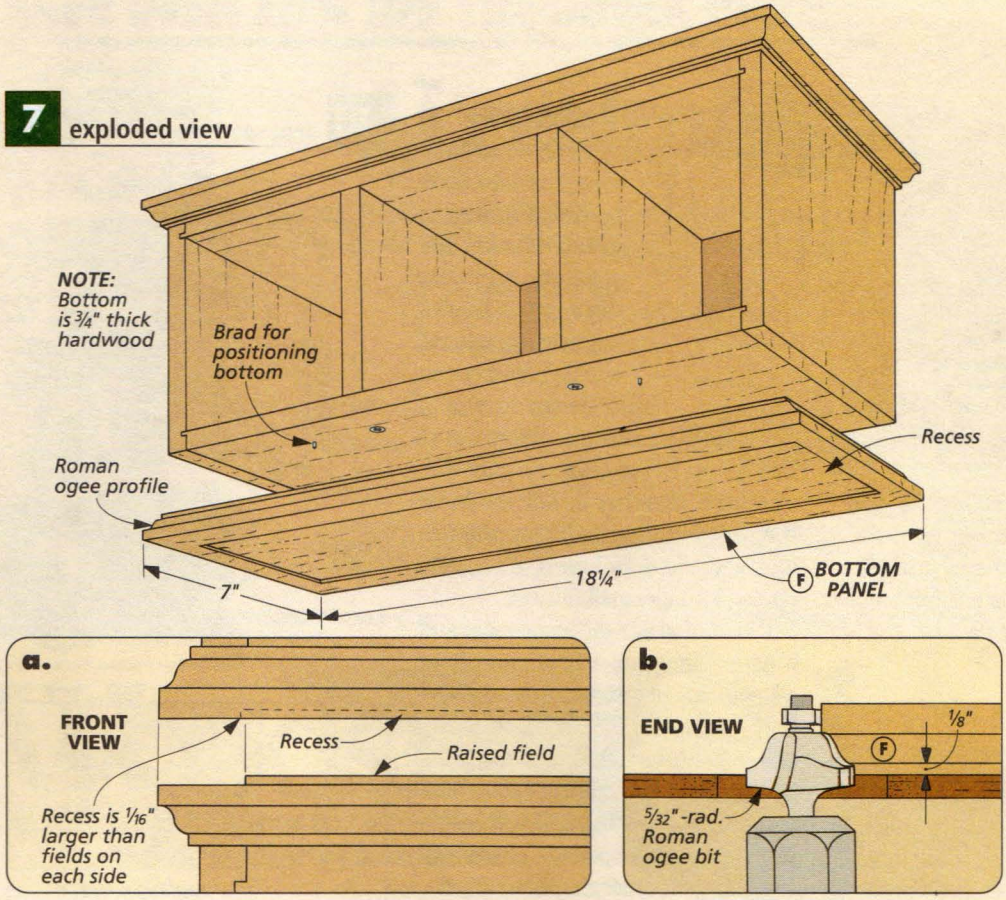

BOTTOM

All that's left now is to add the *bottom panel (F)*. It's the same size and has the same ogee profile as the top, which you can see in Figs. 7 and 7b. The difference is it has a recess on the bottom that's sized to fit over the raised fields on the case top (Fig. 7a).

RECESS. When routing this recess, you won't have to worry about being meticulous. You can see in Fig. 7a that the recess should be a little larger than the raised fields it fits over.

The first step is to define the outside edges of the recess, as shown in Fig. 8b. This requires four "stopped" cuts on the router table — the piece has to be lowered onto a spinning straight bit (as in Fig. 8) and then lifted off at the end. To "guide" you, just draw start and stop lines on the fence 7/8" on either side of the bit. (The fence should also be set 7/8" from the bit.)

With the edges established, I moved over to the workbench, setting the bottom on a router pad. Now the rest of the waste can be removed with a hand-held router and a straight bit, moving the router back and forth, as illustrated in Fig. 9. Then all that's left is to square up the corners with a sharp chisel (Fig. 9a).

Finally, the bottom piece can be glued to the case, using the same brad trick used earlier for the top.

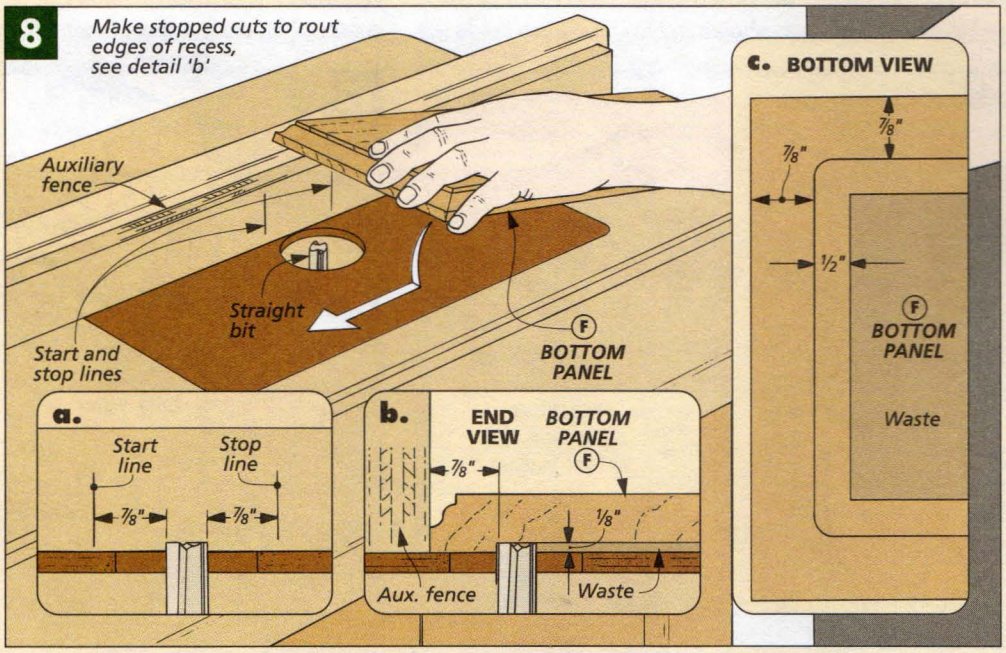

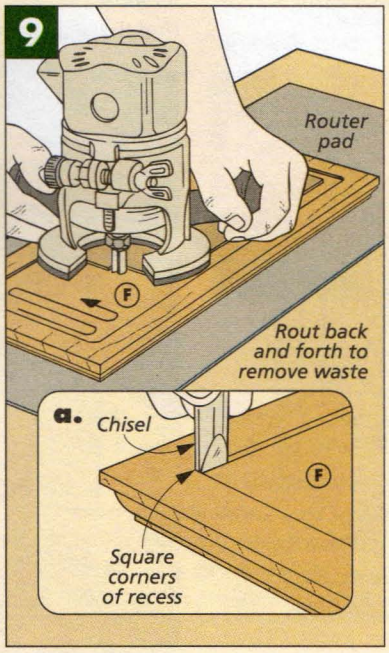

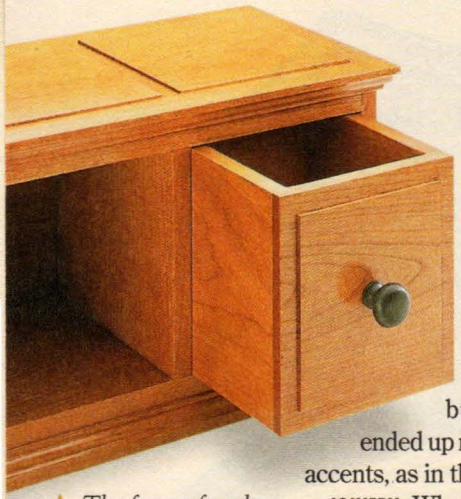

▲ *The front of each drawer features a raised field like the ones on top of the case.*

Drawers

Now that you have a case or two completed, it's time to decide whether you want to add any drawers. They're completely optional, and the number you build is up to you. I ended up making a few to use as accents, as in the photo on page 30.

JOINERY. Whether or not you build the drawers, you still may want to look at the joinery I used. It's a great choice for any small drawer.

I wanted to use the same dado and tongue joinery as on the case. After all, you can cut a joint quicker the second time around. But there was a catch. With exactly the same joint, the groove that holds the drawer bottom would have been visible when the drawer was opened, as you can see in the first margin photo at left.

The solution only requires one additional step. I cut a rabbet to "eliminate" the groove, see second margin photo. (This will get clearer as we go through the process step-by-step.)

GROOVE FOR BOTTOM. After cutting the *drawer front (G), back (G),* and *sides (H)* to size, I cut a groove in each to hold an 1/8" hardboard *bottom (I),* which can be seen in Fig. 10a.

DADO & TONGUE JOINTS. Next, I cut the dadoes on the front and back pieces, as shown in Figs. 11 and 11a. But note that these dadoes are 1/4" deep. (The ones in the case were only 1/8".)

Now here's where the extra step comes in. Fig. 11b shows a rabbet being cut on the front and back pieces. This rabbet is what keeps the bottom groove from being exposed.

With the rabbet cut, tongues can be cut in the drawer sides to fit in the grooves (Figs. 12 and 12a).

RAISED FIELD. All that's left is to rout the raised field on each drawer front, as shown in Fig. 10. These fields are slightly narrower (1/2") than the ones on top of the case, but the technique is basically the same.

FINISH. After the drawers have been glued together, it's time to finish the project. When sanding, you'll want to go easy on the raised fields, or the shoulders could end up rounded. I applied a few coats of an oil finish. (You can apply a cherry stain first, if you wish.) Then a small knob can be centered on each drawer front. W

10 exploded view

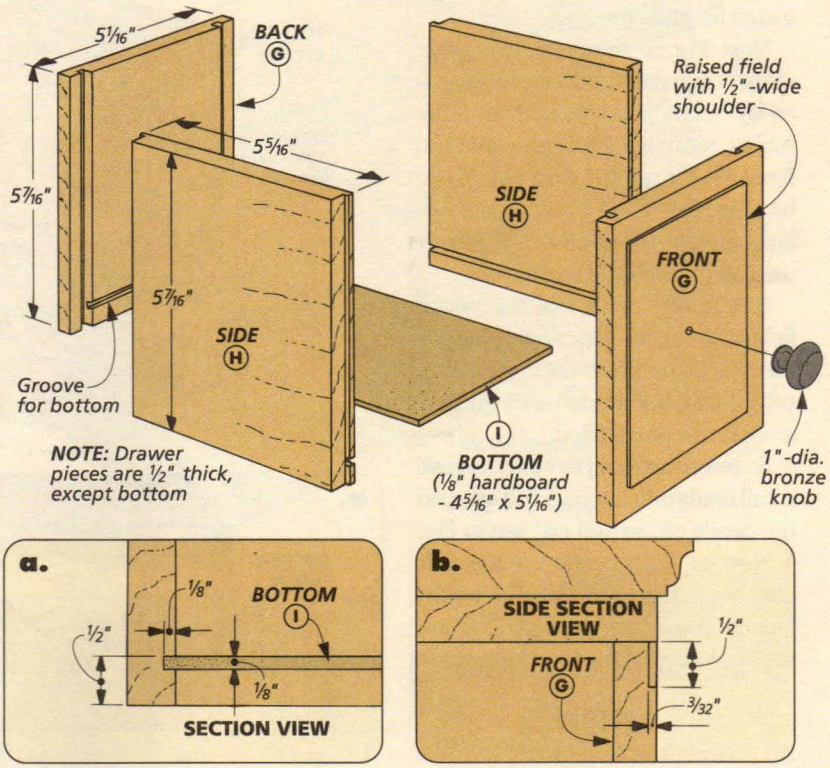

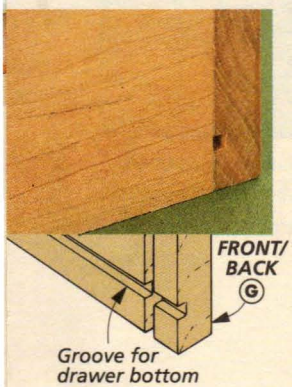

▲ *Here, the groove for the bottom is visible after the drawer is assembled.*

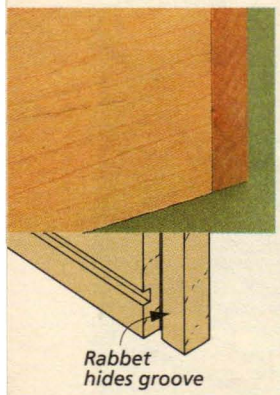

▲ *By rabbeting the ends of the drawer front, the bottom groove will be "hidden."*

11

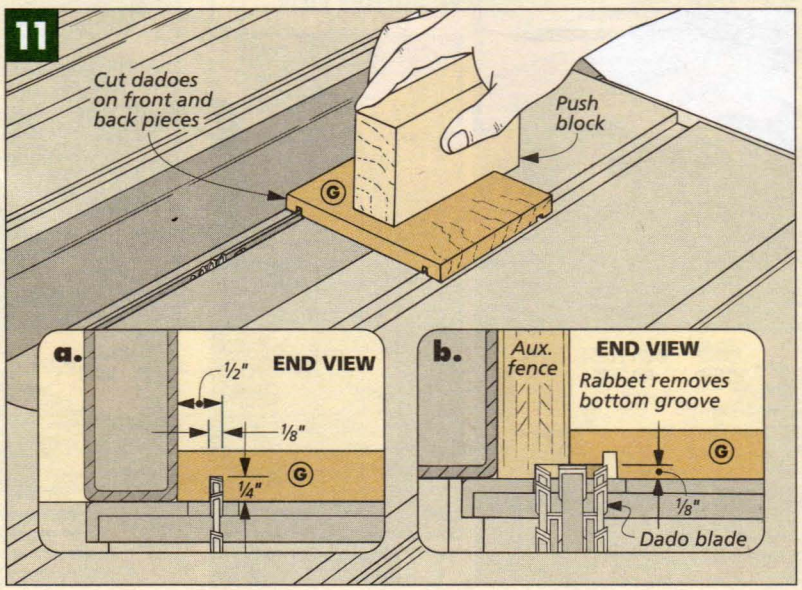

12

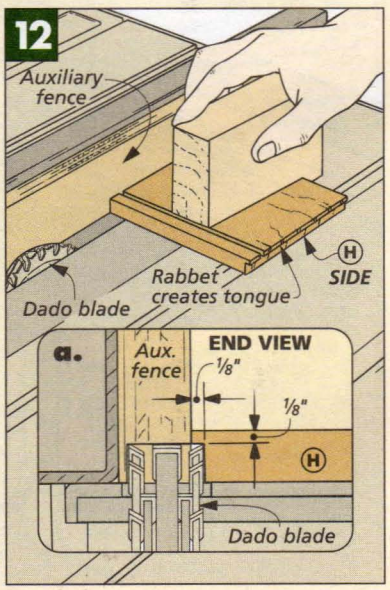

SOURCES

Woodsmith Project Supplies is currently offering a hardware kit for the Kitchen Work Center in this issue. (See the left box below for ordering information.) Similar supplies, as well as supplies for the other projects featured, are also available at local woodworking and hardware stores or the mail order sources at right.

KITCHEN WORK CENTER

The work center on page 6 doesn't require a great deal of hardware (and it should be readily available). I should note, though, that the metal drawer slides that you choose should be full-extension slides so you can access the entire drawer.

Currently, *Woodsmith Project Supplies* is offering a hardware kit that includes everything you need *except* the casters and drawer pulls, see below:

(1 pair) 16"-long Full-Extension Slides
(4) Figure-8 Tabletop Fasteners
(4) Plastic Tack Glides
(4) Spoon-Style Shelf Supports (Nickel)
(8) #8 x 1" Fh Screws
(30) #8 x 1¼" Fh Screws
(22) #8 x 1¾" Fh Screws
(6) #8 x 2" Fh Screws
(4) #8 Finish Washers
• Kitchen Work Center Hardware Kit
7129-100 ..... $21.95

DRAWER PULLS. In the hardware kit above, we decided *not* to include the drawer pulls since you might want to choose some pulls to match those on your kitchen cabinets. For our work center, we chose 3½"-wide nickel-plated pulls we found at a local home center. (They're also available from Restoration Hardware, which is listed at right.)

LOCKING CASTERS. If you would like this work center to be truly mobile, you might consider building the legs with 4"-dia. casters, as shown in the box on page 9.

Of course, you'll want locking casters for this. But don't settle for just any casters — the wheel on a typical caster will still swivel after the wheel is locked. What you want are "double-locking" casters — ones that won't roll *or* swivel when the brake is engaged (see the list at right).

PASTRY BOARD. The pastry board is simply a large cutting board with a couple of cleats to help keep it in place while you work. The only hardware you'll need are half a dozen woodscrews, as well as some ⅜"-diameter wood plugs to hide the screw heads.

FRAMING SUPPLIES

We didn't use any special tools or hardware to make the cove molding for the picture frames on page 18. You will, however, need some hardware and supplies when mounting and hanging the picture, as we described on page 25.

Craft stores, framing shops, and hardware stores should carry nearly everything you need. And there are plenty of mail order sources that carry hanging hardware, mat cutting tools, and even small picture frame moldings.

Note: Unless you're experienced at cutting matboard for prints, I'd suggest going to a local frame shop to have your mats cut. (The glass can be purchased at the hardware store.)

BEVELED MIRROR. When using a beveled mirror in a project, we often custom order it. But this time, the frame was "designed around" a standard beveled mirror that we purchased at a home center. (Ours was approximately 22" x 28".)

COLLECTOR CASES

The stacking collector cases on page 30 are a great weekend project, and you won't need much hardware to build them — just a few woodscrews and (if you decide to add drawers) some knobs for the fronts.

For the knobs on my drawers, I ordered 1"-dia. "oil-rubbed" bronze knobs from Restoration Hardware (item No. 2403.0078), see the list at right. However, small knobs are readily available from any of the sources listed. W

MAIL ORDER SOURCES

Similar project supplies and hardware may be ordered from the following companies:

Constantine's
800-223-8087
www.constantines.com
Kitchen work center hardware, Casters, Framing supplies

Lee Valley
800-871-8158
www.leevalley.com
Casters, Framing supplies

Restoration Hardware
800-762-1005
www.restoration hardware.com
Kitchen work center pulls, Collector case knobs

Rockler Woodworking
800-279-4441
www.rockler.com
Kitchen work center hardware, Framing supplies

Woodcraft
800-225-1153
www.woodcraft.com
Kitchen work center hardware, Casters, Framing supplies

Woodworker's Supply
800-645-9292
Kitchen work center hardware, Framing supplies

WOODSMITH PROJECT SUPPLIES

To order hardware kits from *Woodsmith Project Supplies*, please use our Toll Free order line, see below. It's open Monday through Friday, from 8 AM to 5 PM Central Time. Before calling, please have your VISA, MasterCard, or Discover Card ready.

If you would like to mail in your order, call the number below for more information concerning shipping charges as well as any applicable sales tax.

1-800-444-7527
When ordering, please use Key W129

Note: Prices subject to change after August 2000.

Woodsmith *on the web*

- Over 100 Woodworking Tips Online
- Visit Our Readers' Project Photo Gallery
- Project Plans You Can Download
- Catalog of Project Kits, Tools, Jigs & Plans
- Forums for Woodworking, Tools & Classifieds
- Links to Other Woodworking Sites
- Order *Woodsmith/ShopNotes* Back Issues

www.woodsmith.com

New Online Customer Service
Click on Subscriber Services at
www.woodsmith.com
- Access your account status
- Find out if your payment has been received
- Change your mailing or e-mail address
- Tell us if you've missed an issue

FINAL DETAILS

◄ **Kitchen Work Center.** *This attractive work station features a heavy-duty cutting board top for chopping, pounding, or slicing. Plans for a wine rack and other options are also included. It all begins on page 6.*

▼ **Stacking Collector Cases.** *Perfect for CDs or small collectibles, these stacking cases are modular so you can add to them as your collection or storage needs grow. Complete plans start on page 30.*

▲ **Serving Tray.** *The sides of this serving tray are hollowed out to create a graceful profile that feels comfortable in your hands. Easy-to-follow directions for this project can be found on page 26.*

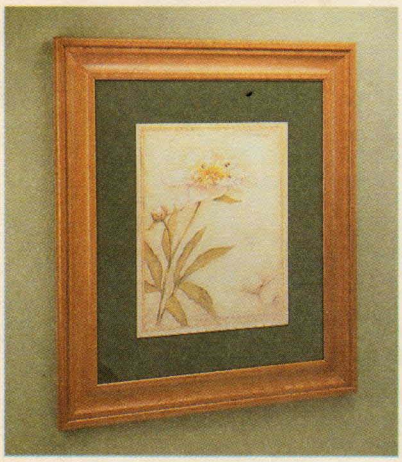

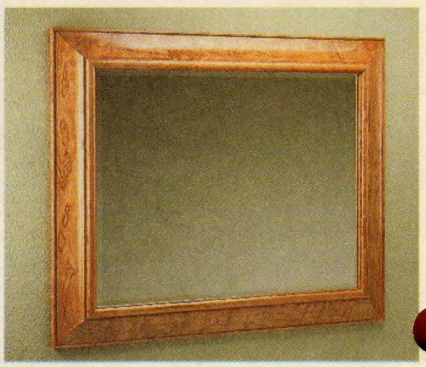

Classic Picture Frames. *These three large, impressive-looking frames all have one thing in common — they feature wide, hollowed-out coves that can be cut on a table saw. Step-by-step instructions guide you through the process starting on page 18.*